DAVIS PRESERVE - PHASE 2

NICK DAVIS ROAD
LIMESTONE COUNTY, AL

PREPARED FOR

DR HORTON

415-H CHURCH ST NW STE 202

HUNTSVILLE, AL 35801

PREPARED BY:

PUGH WRIGHT MCANALLY INC. CIVIL ENGINEERS

Decatur, AL Ph. 256-353-3937

DATE PREPARED:

APRIL 2024

CERTIFICATE OF ENGINEERING DESIGN BY A PROFESSIONAL ENGINEER
I, NATHAN TOMBERLIN, A PROFESSIONAL ENGINEER LICENSED IN THE STATE OF ALABAMA, LICENSE NUMBER 30456, DO HEREBY CERTIFY THAT THE STREETS AND DRAINAGE SYSTEM FOR DAVIS PRESERVE SUBDIVISION HAVE BEEN DESIGNED UNDER MY SUPERVISION.

I FURTHER CERTIFY THAT THE DRAINAGE SYSTEM HAS BEEN DESIGNED TO MEET THE 25 YEAR STORM CRITERIA. THIS DESIGN WILL ENSURE THAT ALL DRAINAGE WATERS OCCURRING DURING A STORM OF LESS THAN 25 YEAR STORM MAGNITUDE WILL FLOW WITHIN THE RIGHTS-OF-WAY OR DRAINAGE EASEMENTS INDICATED AS SUCH ON THE OFFICIAL PLAT FOR THIS SUBDIVISION.

I FURTHER CERTIFY THAT THE STREETS ARE DESIGNED FOR A DESIGN SPEED OF 25 MPH TO MEET APPLICABLE DESIGN CRITERIA FOR SAFETY, GEOMETRY, PROFILE, AND TYPICAL SECTIONS ACCORDING TO THE ALABAMA DEPARTMENT OF TRANSPORTATION'S "COUNTY ROAD DESIGN POLICY"

NAME NATHAN TOMBERLIN
P.E.# 30456
TITLE PROJECT ENGINEER
FIRM PUGH WRIGHT MCANALLY
DATE DECEMBER 23, 2022

OWNER/DEVELOPER:
DR HORTON
415-H CHURCH ST NW STE 202
HUNTSVILLE, AL 35801

ENGINEER:
PUGH WRIGHT MCANALLY, INC.
310 8TH AVENUE NE
DECATUR, AL 35602

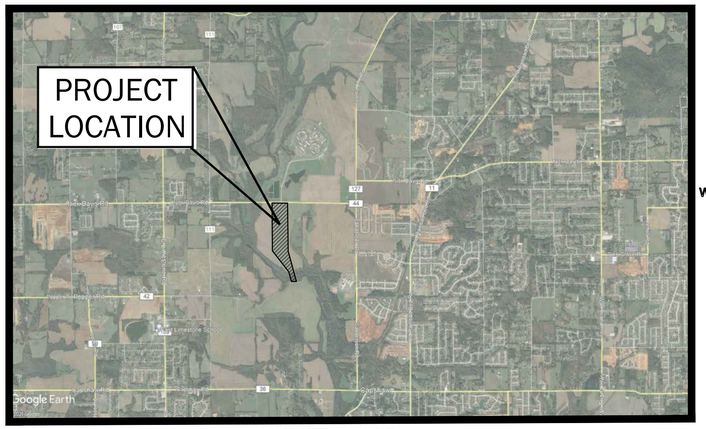

VICINITY MAP
NOT TO SCALE

N
W E
S

SHEET INDEX

PUGH WRIGHT MCANALLY INC. CIVIL ENGINEERS
310 8th AVENUE NE -- PO BOX 2419 -- DECATUR, AL -- (256) 353-3937
Pugh Wright McAnally, Inc. www.pughwrightmcanally.com

REVISIONS

Rev#	Description	Date
5		
4		
3		
2		
1		

DR HORTON
DAVIS PRESERVE - PHASE 2
LIMESTONE COUNTY
SECTION 11, TOWNSHIP 3 SOUTH, RANGE 3 WEST
LIMESTONE COUNTY, ALABAMA

COVER AND INDEX SHEET

Date: 04/12/2024
Drawn By: GGL
Approved By: NLT
Scale: N.T.S.

Sign/Seal
ALABAMA LICENSED NO. 30456 PROFESSIONAL ENGINEER 04/12/2024 NATHAN L. TOMBERLIN

Job Number:
537-24

Sheet Number:
G1.0

GENERAL NOTES

1. THE CONTRACTOR IS ADVISED OF OTHER EXISTING UTILITIES, BOTH ABOVE AND BELOW GROUND, IN THE PROJECT AREA. THE CONTRACTOR IS RESPONSIBLE FOR DETERMINING THE PRESENCE AND LOCATION OF ALL UNDERGROUND UTILITIES PRIOR TO BIDDING AND CONSTRUCTION. THE CONTRACTOR SHALL COORDINATE ALL WORK WITH OTHER EXISTING UTILITIES. THE CONTRACTOR SHALL REPAIR ANY DAMAGES TO OTHER UTILITIES AT NO ADDITIONAL COST TO THE OWNER.

2. EXISTING UTILITY LOCATIONS AS INDICATED IN THE DRAWINGS ARE BASED ON INFORMATION COMPILED FROM FIELD SURVEYS PERFORMED IN LATE 2021. PRESENCE AND LOCATIONS OF UTILITIES ARE BASED ON BEST AVAILABLE INFORMATION AND SHALL BE CONSIDERED ONLY AS APPROXIMATE. THE CONTRACTOR SHALL BE SOLELY RESPONSIBLE FOR DETERMINING THE PRESENCE AND LOCATION OF UTILITIES AND STRUCTURES BEFORE UNDERTAKING ANY EXCAVATION OR DISTURBANCE.

3. THE CONTRACTOR'S SCOPE OF WORK SHALL INCLUDE COSTS FOR INSTALLATION AND MAINTENANCE OF ALL REQUIRED EROSION CONTROL MEASURES; FOR CLEAN-UP; AND FOR GRASSING AND SEEDING. NO SEPARATE PAY ITEMS ARE INCLUDED FOR THOSE WORK ITEMS.

4. RIGHT-OF-WAY AND EASEMENT LINES SHOWN IN THE DRAWINGS ARE BASED ON FIELD-LOCATED MONUMENT MARKERS. WHERE MONUMENT MARKERS COULD NOT BE LOCATED, RIGHT-OF-WAY AND EASEMENT LOCATIONS AS SHOWN ARE ESTIMATED FROM AVAILABLE PROPERTY INFORMATION.

5. THE CONTRACTOR IS RESPONSIBLE FOR REPLACING OR REPAIRING ANY DAMAGED PUBLIC OR PRIVATE PROPERTY OR FACILITIES TO THE SAME OR BETTER CONDITION AS EXISTED PRIOR TO CONSTRUCTION. THE CONTRACTOR SHALL COORDINATE ANY REPLACEMENT AND/OR REPAIR WITH THE ENGINEER, AND SHALL COMPLETE SUCH WORK TO THE SATISFACTION OF THE ENGINEER.

6. PIPE LENGTHS INDICATED ARE FROM CENTER TO CENTER OF ADJACENT MANHOLES.

7. HORIZONTAL AND VERTICAL INFORMATION ON THE DRAWINGS ARE ON THE ALABAMA WEST STATE COORDINATE SYSTEM NAD83 AND NAVD88 .

8. ALL SANITARY SEWER AND WATER PIPING IS REQUIRED TO MEET THE MINIMUM REQUIREMENTS OF LIMESTONE COUNTY WATER AND SEWER AUTHORITY.

9. PIPE DESIGNATED ON THE DRAWINGS AS DUCTILE IRON PIPE SHALL BE CLASS 350 PSI UNLESS SPECIFICALLY NOTED OTHERWISE.

10. ALL PIPE IN CASING SHALL HAVE A LOCKING TYPE JOINT TO ALLOW FOR PIPE REMOVAL.

11. CONTRACTOR IS REQUIRED TO CONTACT THE COUNTY ENGINEERING DEPT TWO WEEKS IN ADVANCE OF ANTICIPATED ROAD CLOSURES OR DISRUPTIONS. CONTRACTOR SHALL COORDINATE CLOSURE AND BARRICADE LOCATIONS WITH THE CITY ENGINEERING DEPT (256) 341-4875

12. CONSTRUCTION MATERIALS, EQUIPMENT AND PROCEDURES SHALL BE IN GENERAL ACCORD WITH ALABAMA DEPARTMENT OF TRANSPORTATION (ALDOT) STANDARD SPECIFICATIONS FOR HIGHWAY CONSTRUCTION, LATEST EDITION.

13. COORDINATION AND COOPERATION WILL BE EFFECTED BETWEEN THE CONTRACTOR, OWNER AND THE UTILITIES DEPARTMENTS FOR RELOCATIONS, AND/OR ADJUSTMENTS.

14. THE OWNER RESERVES THE RIGHT TO DIRECT THE PRIORITY OF THE WORK, TO COORDINATE SCHEDULE REQUIREMENTS AND PREVENT UNNECESSARY DISRUPTION OF TRAFFIC AND OTHER ACTIVITIES WITHIN THE PROJECT AREA.

15. CONTRACTOR WILL CONFORM TO ALL LOCAL ORDINANCES, CODES AND REQUIREMENTS. ANY SPECIAL PERMITS OR REQUIREMENTS WILL BE COMPLETELY ENFORCED. ALL COST FOR PERMITS SHALL BE PAID BY CONTRACTOR.

16. NO SEPARATE ITEM OR SPECIFICATION WAS ESTABLISHED FOR FINAL CLEANUP. HOWEVER, THE CONTRACTOR IS ADVISED THAT GRADING ADJACENT TO ALL FACILITIES SHALL BE COMPLETE, SMOOTH AND PLEASING. POSITIVE DRAINAGE WILL BE PROVIDED THROUGHOUT THE ENTIRE PROJECT AREA DURING CONSTRUCTION AS WELL AS AFTER FINAL CLEANUP.

17. HORIZONTAL AND VERTICAL SURVEY CONTROL REFERENCES WILL BE PROVIDED BY THE OWNER. ALL OTHER CONSTRUCTION LAYOUT SHALL BE PROVIDED BY THE CONTRACTOR WITHOUT EXPENSE TO THE OWNER.

18. DENSITY TESTS FOR EARTHWORK AND BASE MATERIAL SHALL BE PERFORMED ON EACH LAYER OR LIFT FOR EACH 800 SQUARE YARDS SURFACE AREA. THREE CONCRETE TEST CYLINDERS SHALL BE PREPARED, CURED AND TESTED FOR EACH DAY'S POUR, OR EACH 50 C.Y. OR INCREMENT THEREOF, WHICHEVER IS THE GREATER REQUIREMENT.

19. MATERIALS TESTING SHALL BE PROVIDED BY THE CONTRACTOR WITHOUT EXPENSE

GENERAL NOTES

TO THE OWNER.

20. CLEARING AND GRUBBING SHALL INCLUDE REMOVAL OF ALL EXISTING TREES AND BRUSH, STRUCTURES, PIPES, CURBS, CABLES, SLABS, PAVEMENT, DEBRIS, AND ALL OTHER ITEMS TO BE REMOVED. ALL DEBRIS AND FLAMMABLE MATERIAL NOT BURNED WILL BE REMOVED FROM THE SITE AND DISPOSED AT THE CONTRACTOR'S EXPENSE. DEBRIS MAY NOT BE BURNED WITHOUT PRIOR PERMISSION AND PROPER PERMIT FROM THE LOCAL AUTHORITY HAVING JURISDICTION.

21. CLEARING, GRUBBING, STRIPPING AND UNSUITABLE MATERIAL EXCAVATION SHALL BE ACCOMPLISHED TO THE SATISFACTION OF THE OWNER'S REPRESENTATIVE PRIOR TO PERFORMING THE EARTHWORK. THE SURFACE SHALL THEN BE SCARIFIED, COMPACTED, PROOFROLLED AND APPROVED PRIOR TO PLACING THE FILL MATERIAL.

22. NO ROCK IS ANTICIPATED TO BE ENCOUNTERED WITHIN THE PROJECT SITE. HOWEVER, THE CONTRACTOR SHOULD EXAMINE THE SITE TO HIS OWN SATISFACTION PRIOR TO SUBMITTING HIS BID. NO EXTRA COMPENSATION WILL BE PAID SHOULD ROCK BE ENCOUNTERED.

23. CONTROLLED EARTHFILL MATERIAL FOR BUILDING PADS, ACCESS DRIVES AND PARKING AREA SHALL BE ASTM UNIFIED SOIL CLASSIFICATION SYSTEM TYPE CL OR SC, HAVING A LIQUID LIMIT LESS THAN 50, PLASTICITY INDEX LESS THAN 30, AND STANDARD PROCTOR DRY DENSITY NOT LESS THAN 100 POUNDS PER CUBIC FOOT. EARTHFILL MATERIAL SHALL BE SUBJECT TO APPROVAL BY THE OWNER'S REPRESENTATIVE. MATERIALS WITH ROCK FRAGMENTS GREATER THAN 3 INCHES IN DIAMETER SHALL NOT BE USED.

24. THE EMBANKMENTS FOR BUILDING PADS, ACCESS DRIVES, PARKING AND TRUCK PARKING AREA SHALL BE COMPACTED TO NOT LESS THAN 100% STANDARD PROCTOR DENSITY AS ESTABLISHED BY AASHTO T-99 SPECIFICATIONS. EARTHFILL SHALL BE PLACED IN LAYERS NOT TO EXCEED 6 INCHES COMPACTED THICKNESS. SUBGRADE AND EMBANKMENT SHALL BE PLACED AT OPTIMUM MOISTURE CONTENT, NOT TO EXCEED 2% DEVIATION BELOW OR 3% DEVIATION ABOVE OPTIMUM.

25. ALL TRENCHES UNDER PAVED AREAS, SHOULDERS AND DRIVEWAYS SHALL BE FILLED TO SUBGRADE WITH CRUSHED AGGREGATE BASE COURSE, TYPE "B", PLANT MIXED, PLACED IN 6" LAYERS AND COMPACTED TO 100% PROCTOR DENSITY OR 85% SOLID VOLUME AT OPTIMUM MOISTURE (+/-2%). FLOWABLE BACKFILL MAY BE USED AS AN ALTERNATE. NO SEPARATE PAYMENT SHALL BE MADE FOR FLOWABLE OR AGGREGATE BACKFILL.

26. THE CONTRACTOR SHALL NOT LEAVE OPEN EXCAVATIONS AND SHALL BACKFILL ALL OPEN EXCAVATIONS BEFORE THE END OF EACH DAY UNLESS APPROVED BY THE OWNER'S REPRESENTATIVE. NO SEPARATE PAYMENT WILL BE MADE FOR THIS REQUIREMENT, BUT SHALL BE INCLUDED IN THE UNIT PRICE BID FOR THE ITEMS OF WORK.

27. PAVEMENT REPAIR SHALL NOT BE A SEPARATE PAY ITEM BUT SHALL BE INCLUDED IN THE UNIT PRICES BID FOR OTHER WORK ITEMS. SAW THE ENDS OF THE EXISTING PAVEMENT TO PROVIDE STRAIGHT END SECTIONS FOR PAVING REPAIR.

28. CONCRETE FOR THE RETAINING WALLS, HEADWALLS AND SLOPE PAVING SHALL BE 3,000 PSI MINIMUM COMPRESSIVE STRENGTH AT 28 DAYS UNLESS SPECIFIED OTHERWISE.

29. ALL SCARRED AREAS NOT LANDSCAPED SHALL BE SEEDED AND MULCHED.

30. GRASS SEED SHALL MEET REQUIREMENTS FOR SPECIAL URBAN SEED MIX AND SHALL BE APPROVED BY THE OWNER'S REPRESENTATIVE.

31. THE OWNER WILL ACQUIRE THE SEPARATE STORMWATER PERMIT FROM THE ALABAMA DEPARTMENT OF ENVIRONMENTAL MANAGEMENT (ADEM). THE CONTRACTOR SHALL BE RESPONSIBLE TO PROVIDE BEST MANAGEMENT PRACTICES DURING CONSTRUCTION TO ATTENUATE ENVIRONMENTAL EFFECTS OF SILTATION AND/OR EROSION. CONTRACTOR SHALL PROVIDE A RAIN GAGE ON SITE AND SHALL RECORD DAILY RAINFALL TOTALS.

32. THE SITE SHALL BE SHAPED IN ACCORD WITH THE FINISHED GRADE CONTOURS AND GRADED TO DRAIN.

33. DUST CONTROL BY WATERING OR OTHER METHOD APPROVED BY THE OWNER'S REPRESENTATIVE WILL BE MAINTAINED BY THE CONTRACTOR THROUGHOUT THE DURATION OF THIS CONTRACT. THIS IS NOT A SEPARATE PAY ITEM BUT WILL BE INCLUDED IN THE PRICE BID FOR OTHER COMPONENTS AND ITEMS OF WORK.

34. ALL TRAFFIC CONTROL DEVICES SHALL BE ERECTED AND MAINTAINED IN CONFORMANCE WITH THE MANUAL ON UNIFORM TRAFFIC-CONTROL DEVICES AND ANY REVISIONS THEREOF.

GENERAL NOTES

35. ALL DRAINAGE DITCHES ARE TO BE CENTERED ON PROPERTY LINES UNLESS OTHERWISE SHOWN.

36. ALL UTILITIES SHALL BE UNDERGROUND.

37. ALL LOTS SHALL BE GRADED SO THAT RUN-OFF WILL BE DIRECTED TO THE STREET OR TO DRAINAGE WAYS IN A DEDICATED EASEMENT.

38. PROPOSED USE OF DEVELOPMENT IS RESIDENTIAL

EROSION CONTROL NOTES

1. THIS ECP PLAN IS INTENDED FOR THE PURPOSE OF PREVENTING SOIL FROM LEAVING THE SITE. THIS PLAN IS A MINIMUM THAT MUST BE IN PLACE BEFORE ANY CONSTRUCTION BEGINS.

2. FULL IMPLEMENTATION AND CONTINUED MAINTENANCE OF EFFECTIVE STRUCTURAL AND NON-STRUCTURAL COMPONENTS ARE REQUIRED TO BE DONE ON A WEEKLY BASIS BY THE CONTRACTOR. CONTRACTOR SHALL PROVIDE A RAIN GAGE ON SITE AND SHALL RECORD DAILY RAINFALL TOTALS.

3. ALABAMA DEPARTMENT OF ENVIRONMENTAL MANAGEMENT (ADEM) MAY DIRECT THE CONTRACTOR AT ANY TIME TO ADD OR TAKE AWAY FROM THIS DESIGNED ECP. THIS SHALL BE DONE AT NO ADDITIONAL COST TO THE OWNER.

4. ANY CONSTRUCTION IN PROXIMITY OF ANY STATE WATERS, (STREAMS, CREEKS, RIVERS OR LAKES) REQUIRE PRECONSTRUCTION WATER SAMPLES TO ENSURE TURBIDITY OF THOSE WATERS DURING CONSTRUCTION ARE NOT ELEVATED MORE THAN A 50 NTU CHANGE ABOVE BACKGROUND (UPSTREAM TO DOWNSTREAM) OR CANNOT CAUSE A TURBIDITY CHANGE WHICH RESULTS IN "SUBSTANTIAL VISIBLE CONTRAST" WITH BACKGROUND CONDITIONS, OR CANNOT IMPACT BENEFICIAL USE OF STATE WATERS.

5. CONSTRUCTION IS DEFINED AS ANY LAND DISTURBANCE OR DISCHARGE OF POLLUTANTS ASSOCIATED WITH, OR THE RESULTS OF BUILDING, EXCAVATION, LAND CLEARING, GRUBBING, PLACEMENT OR FILL, GRADING, BLASTING, RECLAMATION, AREAS IN WHICH CONSTRUCTION MATERIALS ARE STORED IN ASSOCIATION WITH A LAND DISTURBANCE OR HANDLED ABOVE GROUND, AND OTHER ASSOCIATED AREAS INCLUDING, BUT NOT LIMITED TO CONSTRUCTION SITE VEHICLE PARKING, EQUIPMENT OR SUPPLY AREAS, MATERIAL STOCKPILES, TEMPORARY OFFICE AREAS AND ACCESS ROADS.

6. ANY UPSET CONDITIONS OF A NON-STRUCTURAL COMPONENT OF THE ECP SHALL BE REPAIRED WITHIN 7 CALENDAR DAYS OF VERBAL NOTIFICATION TO THE CONTRACTOR. ANY UPSET CONDITION OF A STRUCTURAL COMPONENT SHALL BE REPAIRED WITHIN 15 CALENDAR DAYS OF VERBAL NOTIFICATION TO THE CONTRACTOR. ALL VERBAL NOTIFICATIONS WILL BE PROVIDED IN WRITING WITHIN 5 BUSINESS DAYS TO THE CONTRACTOR.

7. AT ANY POINT DURING CONSTRUCTION OF THIS PROJECT STOCKPILES, BORROW AREAS, CUT SLOPES OR FILL AREAS ARE NOT ACTIVE FOR 13 DAYS, THESE AREAS SHALL BE SEEDED OR COVERED BY THE CONTRACTOR TO ENSURE NO EROSION OF THESE AREAS OCCUR.

8. ANY NONCOMPLIANCE WITH ADEM, QCP (QUALIFIED CREDENTIALED PROFESSIONAL), QCI (QUALIFIED CREDENTIALED INSPECTOR), OR ANY OTHER STATE, FEDERAL, COUNTY OR CITY MUNICIPALITIES MAY CAUSE A STOP WORK SITUATION.

9. ANY COST REQUIRED FOR FINES OR ACTIONS NECESSITATED BY NOTICES OR VIOLATION OF THE NPDES PERMIT SHALL BE THE RESPONSIBILITY OF THE CONTRACTOR.

10. THE ALABAMA HANDBOOK FOR EROSION CONTROL, SEDIMENT CONTROL AND STORMWATER MANAGEMENT ON CONSTRUCTION SITES AND URBAN AREAS, VOL. 1 AND 2, LATEST EDITION AND ANY REVISION THEREOF, ARE HEREBY MADE A PART OF THESE PLANS.

PUGH WRIGHT MCNALLY INC.
CIVIL ENGINEERS
310 8th AVENUE NE -- PO BOX 2419 -- DECATUR, AL -- (256) 353-3937
Pugh Wright McNally, Inc. www.pughwrightmcnally.com

REVISIONS

Rev#	Description	Date
5		
4		
3		
2		
1		

DR HORTON
DAVIS PRESERVE - PHASE 2
LIMESTONE COUNTY
SECTION 11, TOWNSHIP 3 SOUTH, RANGE 3 WEST
LIMESTONE COUNTY, ALABAMA

GENERAL NOTES

Date: 04/12/2024
Drawn By: GGL
Approved By: NLT
Scale: N.T.S.

Sign/Seal
ALABAMA
LICENSED
NO. 30456
PROFESSIONAL
04/12/2024
ENGINEER
NATHAN L. TOMBERLIN

Job Number:
537-24

Sheet Number:
G2.0

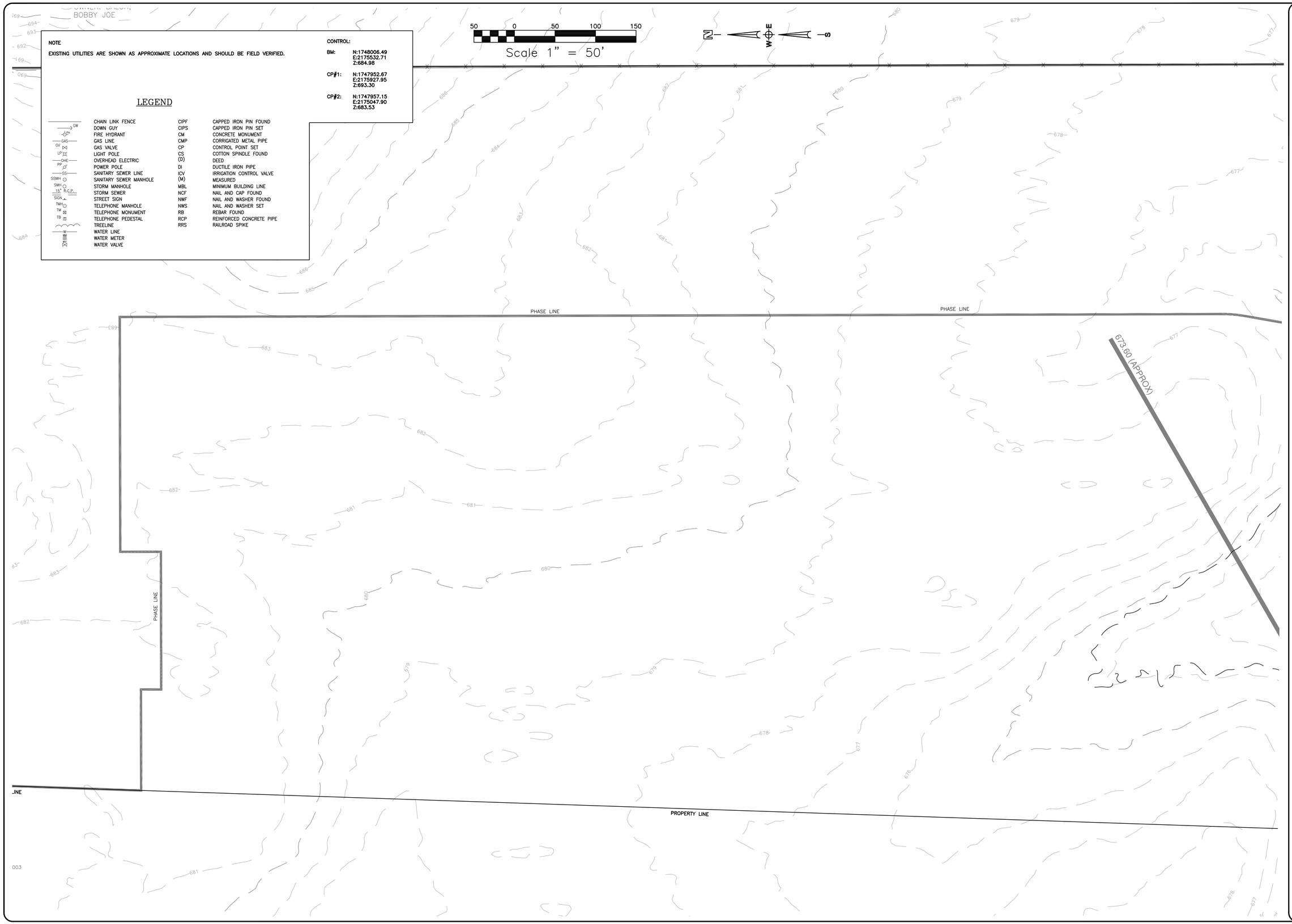

NOTE

EXISTING UTILITIES ARE SHOWN AS APPROXIMATE LOCATIONS AND SHOULD BE FIELD VERIFIED.

CONTROL:

BM: N:1748006.49 E:2175532.71 Z:684.98

CP#1: N:1747952.67 E:2175927.95 Z:693.30

CP#2: N:1747957.15 E:2175047.90 Z:683.53

LEGEND

	CHAIN LINK FENCE	CIPF	CAPPED IRON PIN FOUND
GW	DOWN GUY	CIPS	CAPPED IRON PIN SET
FH	FIRE HYDRANT	CM	CONCRETE MONUMENT
GAS	GAS LINE	CMP	CORRIGATED METAL PIPE
GV	GAS VALVE	CP	CONTROL POINT SET
LP	LIGHT POLE	CS	COTTON SPINDLE FOUND
OHE	OVERHEAD ELECTRIC	(D)	DEED
PP	POWER POLE	DI	DUCTILE IRON PIPE
SS	SANITARY SEWER LINE	ICV	IRRIGATION CONTROL VALVE
SSMH	SANITARY SEWER MANHOLE	(M)	MEASURED
SMH	STORM MANHOLE	MBL	MINIMUM BUILDING LINE
15" R.C.P.	STORM SEWER	NCF	NAIL AND CAP FOUND
SIGN	STREET SIGN	NWF	NAIL AND WASHER FOUND
TMH	TELEPHONE MANHOLE	NWS	NAIL AND WASHER SET
TM	TELEPHONE MONUMENT	RB	REBAR FOUND
TB	TELEPHONE PEDESTAL	RCP	REINFORCED CONCRETE PIPE
	TREELINE	RRS	RAILROAD SPIKE
	WATER LINE		
	WATER METER		
	WATER VALVE		

PUGH WRIGHT MCANALLY INC.
CIVIL ENGINEERS
310 8th AVENUE NE -- PO BOX 2419 -- DECATUR, AL -- (256) 353-3937
Pugh Wright McAnally, Inc. www.pughwrightmcanally.com

REVISIONS

Rev#	Description	Date
5		
4		
3		
2		
1		

DR HORTON
DAVIS PRESERVE - PHASE 2
LIMESTONE COUNTY
SECTION 11, TOWNSHIP 3 SOUTH, RANGE 3 WEST
LIMESTONE COUNTY, ALABAMA

EXISTING CONDITIONS

Date: 04/12/2024
Drawn By: GGL
Approved By: NLT
Scale: 1":50'

Sign/Seal
ALABAMA
LICENSED
NO. 30456
PROFESSIONAL
04/12/2024
ENGINEER
NATHAN L. TOMBERLIN

Job Number:
537-24

Sheet Number:
C1.0

NOTE

EXISTING UTILITIES ARE SHOWN AS APPROXIMATE LOCATIONS AND SHOULD BE FIELD VERIFIED.

CONTROL:

BM: N:1748006.49 E:2175532.71 Z:684.98

CP#1: N:1747952.67 E:2175927.95 Z:693.30

CP#2: N:1747957.15 E:2175047.90 Z:683.53

LEGEND

	CHAIN LINK FENCE	CIPF	CAPPED IRON PIN FOUND
GW	DOWN GUY	CIPS	CAPPED IRON PIN SET
FH	FIRE HYDRANT	CM	CONCRETE MONUMENT
GAS	GAS LINE	CMP	CORRIGATED METAL PIPE
GV	GAS VALVE	CP	CONTROL POINT SET
LP	LIGHT POLE	CS	COTTON SPINDLE FOUND
OHE	OVERHEAD ELECTRIC	(D)	DEED
PP	POWER POLE	DI	DUCTILE IRON PIPE
SS	SANITARY SEWER LINE	ICV	IRRIGATION CONTROL VALVE
SSMH	SANITARY SEWER MANHOLE	(M)	MEASURED
SMH	STORM MANHOLE	MBL	MINIMUM BUILDING LINE
15" R.C.P.	STORM SEWER	NCF	NAIL AND CAP FOUND
SIGN	STREET SIGN	NWF	NAIL AND WASHER FOUND
TMH	TELEPHONE MANHOLE	NWS	NAIL AND WASHER SET
TM	TELEPHONE MONUMENT	RB	REBAR FOUND
TB	TELEPHONE PEDESTAL	RCP	REINFORCED CONCRETE PIPE
	TREELINE	RRS	RAILROAD SPIKE
W	WATER LINE		
	WATER METER		
	WATER VALVE		

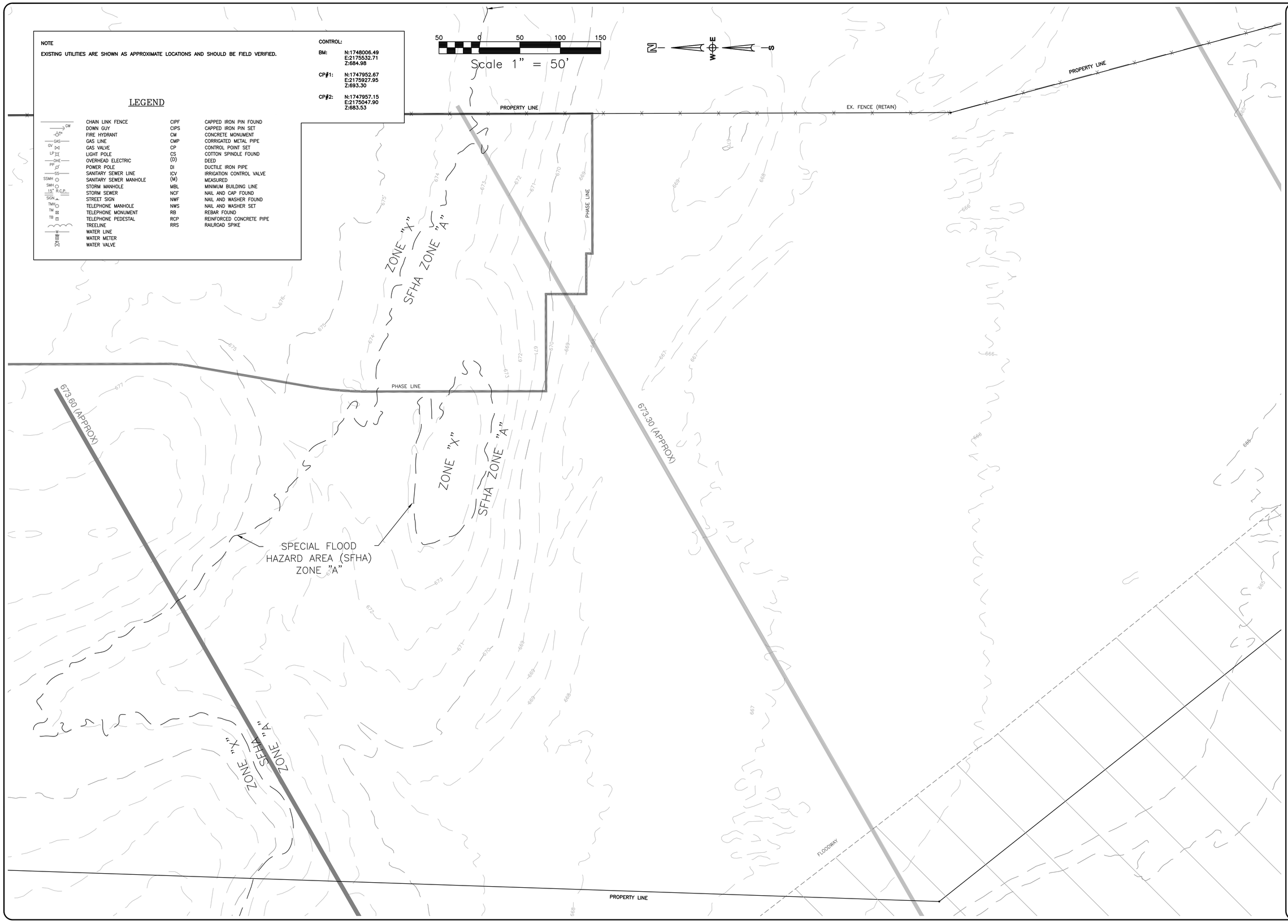

PUGH WRIGHT MCANALLY INC.
CIVIL ENGINEERS
310 8th AVENUE NE -- PO BOX 2419 -- DECATUR, AL -- (256) 353-3937
Pugh Wright McAnally, Inc. www.pughwrightmcanally.com

REVISIONS

Rev#	Description	Date
5		
4		
3		
2		
1		

DR HORTON
DAVIS PRESERVE - PHASE 2
LIMESTONE COUNTY
SECTION 11, TOWNSHIP 3 SOUTH, RANGE 3 WEST
LIMESTONE COUNTY, ALABAMA

EXISTING CONDITIONS

Date: 04/12/2024
Drawn By: GGL
Approved By: NLT
Scale: 1":50'

Sign/Seal
ALABAMA LICENSED NO. 30456 PROFESSIONAL ENGINEER 4/12/2024 NATHAN L. TOMBERLIN

Job Number:
537-24

Sheet Number:
C1.1

NOTE

EXISTING UTILITIES ARE SHOWN AS APPROXIMATE LOCATIONS AND SHOULD BE FIELD VERIFIED.

CONTROL:

BM: N:1748006.49 E:2175532.71 Z:684.98

CP#1: N:1747952.67 E:2175927.95 Z:693.30

CP#2: N:1747957.15 E:2175047.90 Z:683.53

LEGEND

	CHAIN LINK FENCE	CIPF	CAPPED IRON PIN FOUND
GW	DOWN GUY	CIPS	CAPPED IRON PIN SET
FH	FIRE HYDRANT	CM	CONCRETE MONUMENT
GAS	GAS LINE	CMP	CORRIGATED METAL PIPE
GV	GAS VALVE	CP	CONTROL POINT SET
LP	LIGHT POLE	CS	COTTON SPINDLE FOUND
OHE	OVERHEAD ELECTRIC	(D)	DEED
PP	POWER POLE	DI	DUCTILE IRON PIPE
SS	SANITARY SEWER LINE	ICV	IRRIGATION CONTROL VALVE
SSMH	SANITARY SEWER MANHOLE	(M)	MEASURED
SMH	STORM MANHOLE	MBL	MINIMUM BUILDING LINE
15" R.C.P.	STORM SEWER	NCF	NAIL AND CAP FOUND
SIGN	STREET SIGN	NWF	NAIL AND WASHER FOUND
TMH	TELEPHONE MANHOLE	NWS	NAIL AND WASHER SET
TM	TELEPHONE MONUMENT	RB	REBAR FOUND
TB	TELEPHONE PEDESTAL	RCP	REINFORCED CONCRETE PIPE
	TREELINE	RRS	RAILROAD SPIKE
	WATER LINE		
	WATER METER		
	WATER VALVE		

N W E S

60 0 60 120 180

Scale 1" = 60'

DEDICATION

I, JOSEPH WINTERS, WHOSE NAME AS REPRESENTATIVE OF DAVIS PRESERVE, LLC THE OWNER OF SAID LANDS SURVEYED BY PUGH WRIGHT MCANALLY, DO HEREBY CERTIFY THAT TITLE AND IS VESTED IN SAID OWNER(S) AND JOIN IN THE FOREGOING STATEMENT MADE BY PUGH WRIGHT MCANALLY, AND AS STATED IN CODE OF ALABAMA, § 35-2-50 ET SEQ., DO HEREBY CERTIFY THAT IT WAS AND IS OUR INTENTION TO DIVIDE SAID LANDS INTO LOTS AS SHOWN BY SAID PLAT AND DO HEREBY DEDICATE, GRANT, AND CONVEY FOR PUBLIC USE THE STREETS, ALLEYS, AND PUBLIC GROUNDS AS SHOWN ON SAID PLAT.

SIGNED AND SEALED IN THE PRESENCE OF:
TWO OAKS DEVELOPMENT

BY: _____
JOSEPH WINTERS
REPRESENTATIVE OF DAVIS PRESERVE, LLC

ACKNOWLEDGEMENT

STATE OF ALABAMA)
COUNTY OF _____)

I, _____, NOTARY PUBLIC IN AND FOR SAID COUNTY, IN SAID STATE, HEREBY CERTIFY THAT JOSEPH WINTERS, WHOSE NAME AS REPRESENTATIVE OF DAVIS PRESERVE, LLC, IS SIGNED TO THE FOREGOING INSTRUMENT, AND WHO IS KNOWN TO ME,
ACKNOWLEDGED BEFORE ME ON THIS DAY THAT, BEING INFORMED OF THE CONTENT OF THE INSTRUMENT, HE AS SUCH OFFICER AND WITH FULL AUTHORITY, EXECUTED THE SAME VOLUNTARILY FOR AND AS THE ACT OF SAID CORPORATION.

GIVEN UNDER MY HAND AND OFFICIAL SEAL THE _____ DAY OF _____, 20_____

_____
NOTARY PUBLIC

LIMESTONE COUNTY WATER & SEWER AUTHORITY (LCWSA)

LCWSA HAS REVIEWED THE REQUIRED SUBMISSION MATERIAL FOR THE PROPOSED SUBDIVISION IN SUFFICIENT DETAIL TO DETERMINE THAT SERVICE CAN BE MADE AVAILABLE. WHEN IMPROVEMENTS ARE COMPLETED, RECORD/FINAL DRAWINGS WILL BE SUBMITTED TO LCWSA.

_____
NAME/TITLE

_____
DATE

LIMESTONE COUNTY WATER AND SEWER AUTHORITY ENGINEER OR AUTHORIZED REPRESENTATIVE

GENERAL SURVEY NOTES

1 NORTH REFERENCE IS ALABAMA STATE COORDINATE GRID-WEST ZONE (NAD1983) AS DETERMINED BY GNSS OBSERVATIONS.

2 ALL MEASUREMENTS SHOWN ARE TO U.S. STANDARDS AND ARE FIELD MEASUREMENTS UNLESS OTHERWISE SHOWN

3 SOURCE OF INFORMATION USED FOR SURVEY: D.B. 2015, PG 20781, D.B. 2008, PG 62529

4 NO ENCROACHMENTS WERE FOUND ABOVE GROUND EXCEPT AS SHOWN

5 NO SEARCH OF PUBLIC RECORDS HAS BEEN PERFORMED BY THIS FIRM TO DETERMINE IF ANY DEFECTS AND/OR AMBIGUITIES EXIST IN THE TITLE.

6 THERE WAS NO FIELD LOCATION ATTEMPTED TO DETERMINE THE EXTENT OF SUBSURFACE STRUCTURES

7 UNLESS STATED OTHERWISE, GOVERNMENTAL JURISDICTIONAL AREAS OR NEGATIVE EASEMENT, IF ANY, WHICH MIGHT AFFECT THE USE OF THIS PROPERTY WERE NOT LOCATED. THE UNDERSIGNED ASSUMES NO LIABILITY FOR ANY LOSS RESULTING FROM THE EXERCISE OF ANY GOVERNMENTAL JURISDICTION AFFECTING THE USE OF THIS PROPERTY.

8 FIELD WORK COMPLETED ON IN NOVEMBER 2021

CERTIFICATE OF ENGINEERING DESIGN BY A PROFESSIONAL ENGINEER

I, NATHAN TOMBERLIN, A PROFESSIONAL ENGINEER LICENSED IN THE STATE OF ALABAMA. LICENSE NUMBER 30456, DO HEREBY CERTIFY THAT THE STREETS AND DRAINAGE SYSTEM FOR DAVIS PRESERVE SUBDIVISION HAVE BEEN DESIGNED UNDER MY SUPERVISION.

I FURTHER CERTIFY THAT THE DRAINAGE SYSTEM HAS BEEN DESIGNED TO MEET THE 25 YEAR STORM CRITERIA. THIS DESIGN WILL ENSURE THAT ALL DRAINAGE WATERS OCCURRING DURING A STORM OF LESS THAN 25 YEAR STORM MAGNITUDE WILL FLOW WITHIN THE RIGHTS-OF-WAY OR DRAINAGE EASEMENTS INDICATED AS SUCH ON THE OFFICIAL PLAT FOR THIS SUBDIVISION.

I FURTHER CERTIFY THAT THE STREETS ARE DESIGNED FOR A DESIGN SPEED OF 25 MPH TO MEET APPLICABLE DESIGN CRITERIA FOR SAFETY, GEOMETRY, PROFILE, AND TYPICAL SECTIONS ACCORDING TO THE ALABAMA DEPARTMENT OF TRANSPORTATION'S "COUNTY ROAD DESIGN POLICY"

NAME NATHAN TOMBERLIN
P.E.# 30456
TITLE PROJECT ENGINEER
FIRM PUGH WRIGHT MCANALLY
DATE MARCH 08, 2024

PLAT NOTES

1.) 15' DU&T EASEMENT ALONG ALL FRONT LOTS UNLESS OTHERWISE NOTED

2.) ALL EASEMENTS, PUBLIC AREAS, AND RETENTION AREAS ARE TO BE MAINTAINED BY THE HOA.

3.) PHASE 2 CONTAINS 216 LOTS

4.) SMALLEST LOT BEING DEVELOPED IN PHASE 2, LOT 176 = 5887 ST FT±

CERTIFICATE OF APPROVAL BY THE LIMESTONE COUNTY HEALTH DEPARTMENT

THE UNDERSIGNED, AS AUTHORIZED BY THE LIMESTONE COUNTY HEALTH DEPARTMENT, ALABAMA. HEREBY CERTIFIES THIS SUBDIVISION MEETS THE APPROVAL OF THE LIMESTONE COUNTY HEALTH DEPARTMENT SUBJECT TO CERTAIN CONDITIONS OF APPROVAL AND/OR LOT DELETIONS ON FILE WITH THE SAID HEALTH DEPARTMENT, WHICH CONDITIONS ARE MADE A PART OF THIS APPROVAL AS IF SET OUT HEREON. I HEREBY APPROVE THE WITHIN PLAT FOR THE RECORDING OF SAME IN THE PROBATE OFFICE OF LIMESTONE COUNTY, ALABAMA, THIS _____DAY OF _____, 20____.

_____
HEALTH OFFICER

CURVE	RADIUS	ARC LENGTH	CHORD LENGTH	CHORD BEARING
C1	25.00'	39.08'	35.22'	N 44°55'55" W
C2	25.00'	39.46'	35.49'	N 45°04'05" E
C3	25.00'	39.08'	35.22'	N 44°55'48" W
C4	25.00'	39.46'	35.49'	N 45°04'12" E
C5	25.00'	39.08'	35.22'	S 44°55'48" E
C6	25.00'	39.46'	35.49'	S 45°04'12" W
C7	275.00'	47.64'	47.58'	S 04°48'41" W
C8	325.00'	56.30'	56.23'	N 04°48'41" E
C9	25.00'	39.27'	35.36'	N 44°50'56" E
C10	25.00'	39.27'	35.36'	N 45°09'04" W
C11	275.00'	47.64'	47.58'	N 04°48'41" E
C12	325.00'	56.30'	56.23'	S 04°48'41" W
C13	300.00'	51.97'	51.90'	S 04°48'41" W
C14	300.00'	51.97'	51.90'	S 04°48'41" W
C15	225.00'	146.23'	146.53'	N 19°09'14" W
C16	125.00'	113.08'	109.26'	N 64°04'18" W
C17	75.00'	137.53'	119.05'	S 37°28'56" W
C18	125.00'	32.50'	32.41'	S 07°55'59" E
C19	25.00'	39.27'	35.36'	N 44°50'56" E
C20	25.00'	39.27'	35.36'	N 45°09'04" W
C21	275.00'	47.64'	47.58'	S 04°48'41" W
C22	311.72'	49.80'	49.74'	S 04°48'41" W
C23	423.11'	54.10'	54.06'	S 04°48'41" W
C24	25.00'	39.27'	35.36'	N 45°09'04" W
C25	25.00'	39.27'	35.36'	N 44°50'56" E
C26	25.00'	22.69'	21.92'	N 64°09'14" W
C27	200.00'	113.98'	112.44'	S 21°49'24" E
C28	25.00'	41.61'	36.97'	S 42°10'21" W
C29	25.00'	55.85'	44.94'	N 25°50'46" E
C30	25.00'	39.27'	35.36'	N 45°09'04" W
C31	150.00'	39.00'	38.89'	N 07°35'59" W
C32	50.00'	91.68'	79.37'	N 37°28'56" W
C33	100.00'	90.46'	87.41'	S 64°04'18" E
C34	275.00'	47.64'	47.58'	S 04°48'41" W
C35	325.00'	56.30'	56.23'	N 04°48'41" E
C36	250.00'	165.83'	162.81'	N 19°09'14" W
C37	150.00'	135.69'	131.11'	N 64°04'18" W
C38	90.00'	54.62'	53.79'	N 72°36'04" W
C39	50.00'	151.98'	99.87'	S 37°47'32" W
C40	90.00'	53.91'	53.11'	S 32°12'28" E
C41	100.00'	26.00'	25.93'	S 07°35'59" E
C42	445.00'	77.09'	76.99'	S 04°48'41" W
C43	370.00'	245.43'	240.95'	N 19°09'14" W
C44	155.00'	18.50'	18.50'	S 03°16'16" W
C45	445.00'	77.08'	76.98'	S 04°48'43" W
C46	275.00'	28.60'	28.59'	N 06°47'40" E
C47	325.00'	24.21'	24.20'	N 07°38'24" E
C48	325.00'	32.09'	32.08'	N 02°40'39" E
C49	250.00'	20.70'	20.70'	N 02°31'24" W
C50	250.00'	50.00'	49.92'	N 10°37'30" W
C51	250.00'	49.78'	49.71'	N 22°03'17" W
C52	250.00'	45.34'	45.28'	N 32°57'40" W
C53	150.00'	47.26'	47.06'	S 47°10'54" E
C54	150.00'	50.00'	49.77'	N 65°45'23" W
C55	150.00'	38.44'	38.33'	N 83°38'47" W
C56	50.00'	54.33'	51.70'	S 8°57'56" E
C57	50.00'	34.56'	33.88'	S 41°06'10" W
C58	50.00'	39.96'	38.91'	S 01°35'45" E
C59	50.00'	21.71'	21.54'	N 36°55'50" W
C60	100.00'	10.79'	10.78'	N 86°53'49" W
C61	100.00'	79.68'	77.58'	S 60°58'54" E
C62	25.00'	9.36'	9.30'	N 79°25'41" W
C63	25.00'	13.33'	13.17'	N 52°56'51" W
C64	200.00'	14.60'	14.60'	S 36°03'55" E
C65	200.00'	99.38'	98.36'	S 19°44'21" E
C66	445.00'	33.67'	33.67'	N 02°01'04" E
C67	445.00'	43.40'	43.39'	S 06°58'47" W
C68	75.00'	69.52'	66.60'	S 11°18'33" W
C69	75.00'	68.52'	66.16'	N 63°50'24" E
C70	325.00'	33.71'	33.70'	N 02°49'13" E
C71	325.00'	22.59'	22.58'	S 07°46'58" W
C72	275.00'	18.49'	18.48'	N 01°46'29" E
C73	275.00'	29.15'	29.14'	N 06°44'14" E

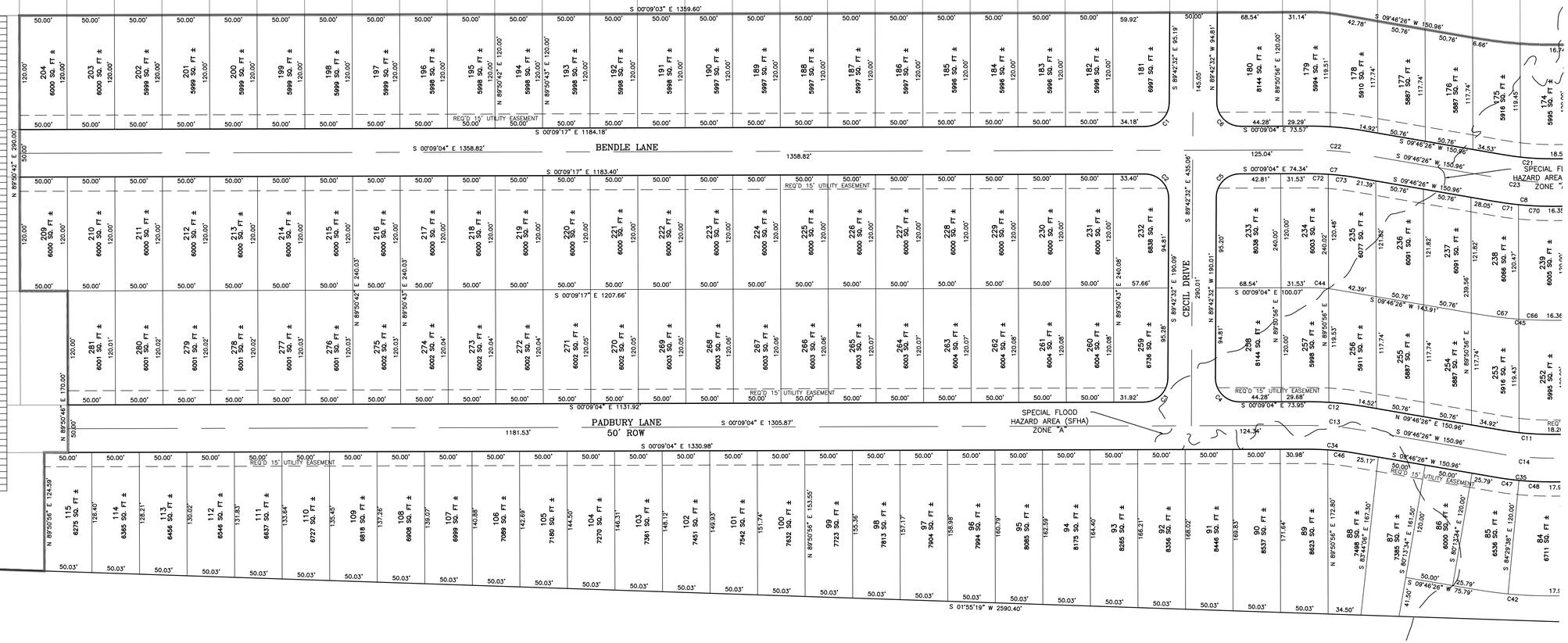

OFFICE OF THE JUDGE OF PROBATE

STATE OF ALABAMA)
LIMESTONE COUNTY)

I HEREBY CERTIFY THAT THIS PLAT OR MAP WAS FILED IN THIS OFFICE FOR RECORD THIS THE _____ DAY OF _____, 20_____, AT _____ O'CLOCK _____ M., AND RECORDED IN BOOK _____ OF PLATS, PAGE _____.

_____
JUDGE OF PROBATE

CERTIFICATE OF APPROVAL BY ATHENS UTILITES

THE ELECTRIC DEPARTMENT HAS REVIEWED THE REQUIRED SUBMITTED MATERIAL FOR THE PROPOSED SUBDIVISION IN SUFFICIENT DETAIL TO DETERMINE THAT SERVICES CAN BE MADE. WHEN IMPROVEMENTS ARE COMPLETED.

NOTE:
1. THE CITY OF ATHENS ELECTRIC DEPARTMENT WILL PROVIDE SERVICE ACCORDING TO ITS STANDARD SERVICES AND REGULATIONS.
2. THE COST FOR THE RELOCATION OR MODIFICATIONS OF ANY ATHENS UTILITIES FACILITIES REQUIRED DUE TO THIS PROJECT MUST BE PAID BY THE DEVELOPER/PROPERTY OWNER.

THE UNDERSIGNED, AS AUTHORIZED BY ATHENS UTILITIES HEREBY APPROVE THE WITHIN PLAT FOR THE RECORDING OF SAME IN THE PROBATE OFFICE OF LIMESTONE COUNTY, ALABAMA,

_____ THIS THE _____ DAY OF _____, 20_____.

_____
ATHENS UTILITIES
AUTHORIZED SIGNATURE

CERTIFICATE OF APPROVAL BY THE COUNTY ENGINEER

THE UNDERSIGNED, AS COUNTY ENGINEER OF THE COUNTY OF LIMESTONE, ALABAMA, HEREBY CERTIFIES APPROVAL OF THIS PLAT FOR THE RECORDING OF SAME IN THE PROBATE OFFICE OF LIMESTONE COUNTY, ALABAMA, THIS _____DAY OF _____,20___.

_____
COUNTY ENGINEER
COUNTY OF LIMESTONE, ALABAMA

PUGH WRIGHT MCANALLY INC.
CIVIL ENGINEERS
310 8th AVENUE NE -- PO BOX 2419 -- DECATUR, AL -- (256) 353-3937
Pugh Wright McAnally, Inc. www.pughwrightmcanally.com

REVISIONS

Rev#	Description	Date
5		
4		
3		
2		
1		

DR HORTON
DAVIS PRESERVE - PHASE 2
LIMESTONE COUNTY
SECTION 11, TOWNSHIP 3 SOUTH, RANGE 3 WEST
LIMESTONE COUNTY, ALABAMA

PRELIMINARY PLAT

Date: 04/12/2024
Drawn By: GL/MB
Approved By: NLT
Scale: 1":60'

Sign/Seal

Job Number:
537-24

Sheet Number:
C1.2

S:\ep\500 Projects\Two Oaks Development\Nick Davis S-D\Phase 2\537-24 Davis Preserve Phase 2 Preliminary Plat.dwg

CURVE	RADIUS	ARC LENGTH	CHORD LENGTH	CHORD BEARING
C1	25.00'	39.08'	35.22'	N 44°55'55" W
C2	25.00'	39.46'	35.49'	N 45°04'05" E
C3	25.00'	39.08'	35.22'	N 44°55'48" W
C4	25.00'	39.46'	35.49'	N 45°04'12" E
C5	25.00'	39.08'	35.22'	S 44°55'48" E
C6	25.00'	39.46'	35.49'	S 45°04'12" W
C7	275.00'	47.64'	47.58'	S 04°48'41" W
C8	325.00'	56.30'	56.23'	N 04°48'41" E
C9	25.00'	39.27'	35.36'	N 44°50'56" E
C10	25.00'	39.27'	35.36'	N 45°09'04" W
C11	275.00'	47.64'	47.58'	N 04°48'41" E
C12	325.00'	56.30'	56.23'	S 04°48'41" W
C13	300.00'	51.97'	51.90'	S 04°48'41" W
C14	300.00'	51.97'	51.90'	S 04°48'41" W
C15	225.00'	149.25'	146.53'	N 19°09'14" W
C16	125.00'	113.08'	109.26'	N 64°04'18" W
C17	75.00'	137.53'	119.05'	S 37°28'56" W
C18	125.00'	32.50'	32.41'	S 07°35'59" E
C19	25.00'	39.27'	35.36'	N 44°50'56" E
C20	25.00'	39.27'	35.36'	N 45°09'04" W
C21	275.00'	47.64'	47.58'	S 04°48'41" W
C22	311.77'	49.80'	49.74'	S 04°48'41" W
C23	423.11'	54.10'	54.06'	S 04°48'41" W
C24	25.00'	39.27'	35.36'	N 45°09'04" W
C25	25.00'	39.27'	35.36'	N 44°50'56" E
C26	25.00'	22.69'	21.92'	N 64°09'14" W
C27	200.00'	113.98'	112.44'	S 21°49'49" E
C28	25.00'	41.61'	36.97'	S 42°10'21" W
C29	25.00'	55.85	44.94'	N 25°50'46" E
C30	25.00'	39.27'	35.36'	N 45°09'04" W
C31	150.00'	39.00'	38.89'	N 07°35'59" W
C32	50.00'	91.68'	79.37'	N 37°28'56" E
C33	100.00'	90.46'	87.41'	S 64°04'18" E
C34	275.00'	47.64'	47.58'	S 04°48'41" W
C35	325.00'	56.30'	56.23'	N 04°48'41" E
C36	250.00'	165.83'	162.81'	N 19°09'14" W
C37	150.00'	135.69'	131.11'	N 64°04'18" W
C38	90.00'	54.62'	53.79'	N 72°36'04" W
C39	50.00'	151.98'	99.87'	S 37°42'32" W
C40	90.00'	53.91'	53.11'	S 32°12'26" E
C41	100.00'	26.00'	25.93'	S 07°35'59" E
C42	445.00'	77.09'	76.99'	S 04°48'41" W
C43	370.00'	245.43'	240.95'	N 19°09'14" W
C44	155.00'	18.52'	18.50'	S 03°16'16" W
C45	445.00'	77.08'	76.98'	S 04°48'41" W
C46	275.00'	28.60'	28.59'	N 06°47'40" E
C47	325.00'	24.21'	24.20'	N 07°38'24" E
C48	325.00'	32.09'	32.08'	N 02°40'39" E

CURVE	RADIUS	ARC LENGTH	CHORD LENGTH	CHORD BEARING
C49	250.00'	20.70'	20.70'	N 02°31'24" W
C50	250.00'	50.00'	49.92'	N 10°37'30" W
C51	250.00'	49.79'	49.71'	N 22°03'37" W
C52	250.00'	45.34'	45.28'	N 32°57'40" W
C53	150.00'	47.26'	47.06'	S 47°10'54" E
C54	150.00'	50.00'	49.77'	N 65°45'23" W
C55	150.00'	38.44'	38.33'	N 82°38'47" W
C56	50.00'	54.33'	51.70'	S 87°57'66" E
C57	50.00'	34.56'	33.88'	S 41°06'10" W
C58	50.00'	39.96'	38.91'	S 01°00'45" E
C59	50.00'	21.71'	21.54'	N 36°55'50" W
C60	100.00'	10.79'	10.78'	N 86°53'49" W
C61	100.00'	79.68'	77.58'	S 60°58'54" E
C62	25.00'	9.36'	9.30'	N 79°25'41" W
C63	25.00'	13.33'	13.17'	N 53°26'51" W
C64	200.00'	14.60'	14.60'	S 36°03'55" E
C65	200.00'	99.38'	98.36'	S 19°44'21" E
C66	445.00'	33.67'	33.67'	N 02°01'04" E
C67	445.00'	43.40'	43.39'	S 06°58'47" W
C68	75.00'	69.00'	66.60'	S 11°18'43" W
C69	75.00'	68.52'	66.16'	N 63°50'24" E
C70	325.00'	33.71'	33.70'	N 02°49'13" E
C71	325.00'	22.59'	22.58'	S 07°46'58" W
C72	275.00'	18.49'	18.48'	N 01°46'29" E
C73	275.00'	29.15'	29.14'	N 06°44'14" E

Scale 1" = 60'

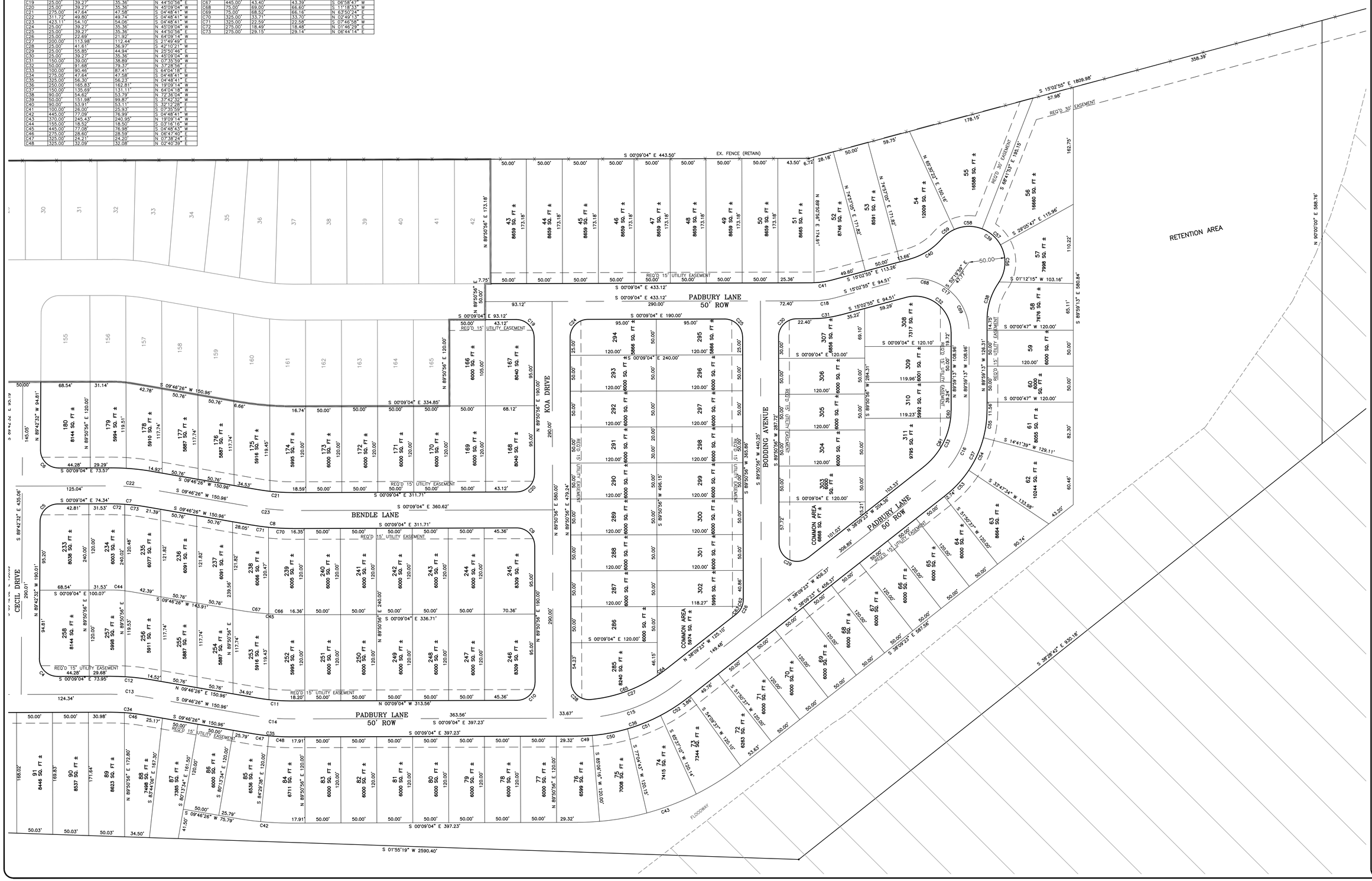

PUGH WRIGHT MCANALLY CIVIL ENGINEERS INC.
310 8th AVENUE NE -- PO BOX 2419 -- DECATUR, AL -- (256) 353-3937
Pugh Wright McAnally, Inc. www.pughwrightmcanally.com

REVISIONS

Rev#	Description	Date
5		
4		
3		
2		
1		

DR HORTON
DAVIS PRESERVE - PHASE 2
LIMESTONE COUNTY
SECTION 11, TOWNSHIP 3 SOUTH, RANGE 3 WEST
LIMESTONE COUNTY, ALABAMA

PRELIMINARY PLAT

Date: 04/12/2024
Drawn By: GL/MB
Approved By: NLT
Scale: 1":60'

Sign/Seal

Job Number:
537-24

Sheet Number:
C1.3

S:\ep\500 Projects\Two Oaks Development\Nick Davis 5-D\Phase 2\537-24 Davis Preserve Phase 2 Preliminary Plat.dwg

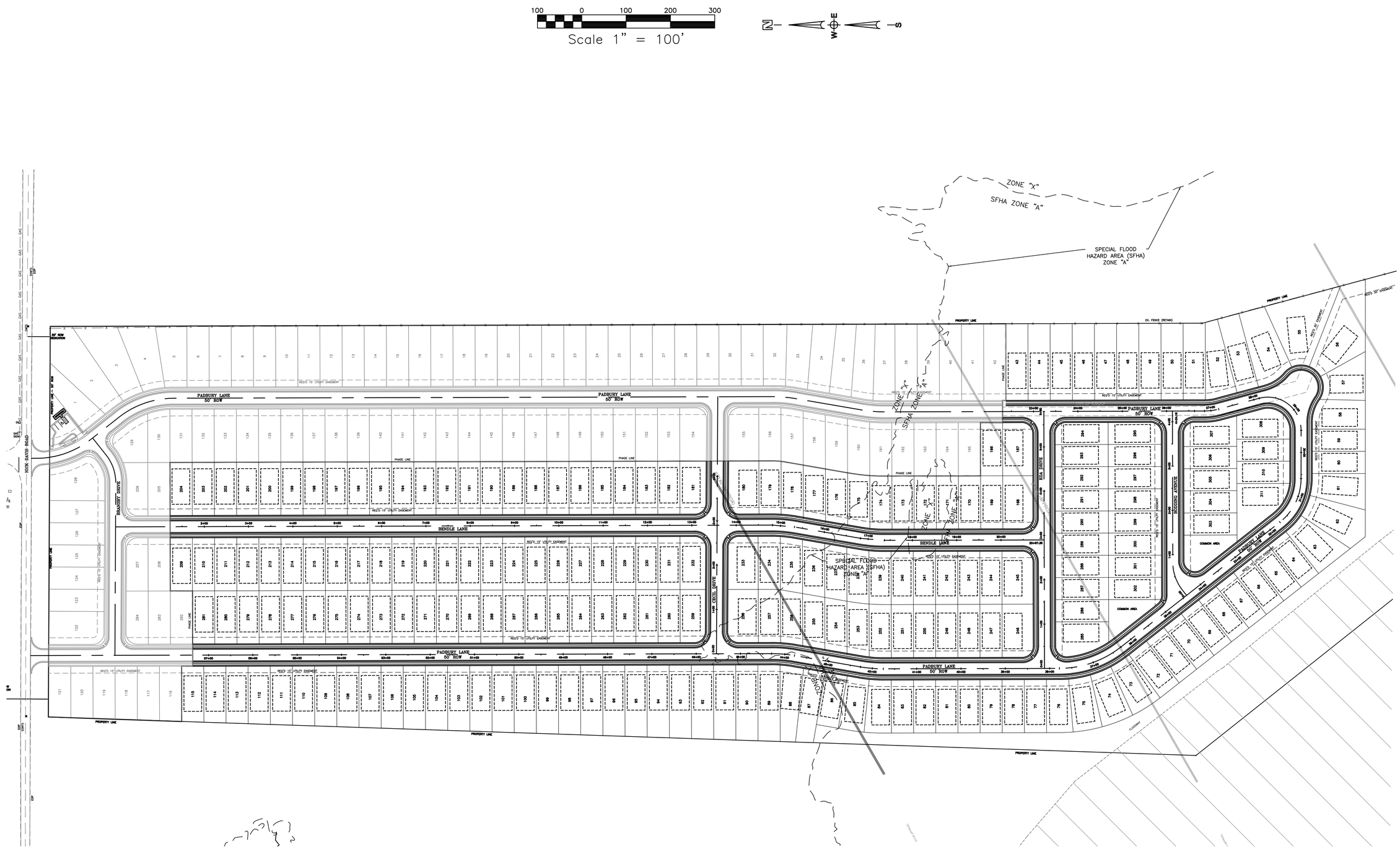

PUGH WRIGHT MCANALLY INC.
CIVIL ENGINEERS
310 8th AVENUE NE -- PO BOX 2419 -- DECATUR, AL -- (256) 353-3937
Pugh Wright McAnally, Inc. www.pughwrightmcanally.com

REVISIONS

Rev#	Description	Date
5	--	--
4	--	--
3	--	--
2	--	--
1	--	--

DR HORTON
DAVIS PRESERVE - PHASE 2
LIMESTONE COUNTY
SECTION 11, TOWNSHIP 3 SOUTH, RANGE 3 WEST
LIMESTONE COUNTY, ALABAMA

OVERALL LAYOUT PLAN

Date: 04/12/2024
Drawn By: GGL
Approved By: NLT
Scale: 1":100'

Sign/Seal
ALABAMA LICENSED NO. 30456 PROFESSIONAL ENGINEER 04/12/2024 NATHAN L. TOMBERLIN

Job Number:
537-24

Sheet Number:
C2.0

OWNER: BACH, BOBBY JOE

NOTE

EXISTING UTILITIES ARE SHOWN AS APPROXIMATE LOCATIONS AND SHOULD BE FIELD VERIFIED.

CONTROL:

BM:	**N:1748006.49 E:2175532.71 Z:684.98**
CP#1:	**N:1747952.67 E:2175927.95 Z:693.30**
CP#2:	**N:1747957.15 E:2175047.90 Z:683.53**

LEGEND

	CHAIN LINK FENCE	CIPF	CAPPED IRON PIN FOUND
GW	DOWN GUY	CIPS	CAPPED IRON PIN SET
FH	FIRE HYDRANT	CM	CONCRETE MONUMENT
GAS	GAS LINE	CMP	CORRIGATED METAL PIPE
GV	GAS VALVE	CP	CONTROL POINT SET
LP	LIGHT POLE	CS	COTTON SPINDLE FOUND
OHE	OVERHEAD ELECTRIC	(D)	DEED
PP	POWER POLE	DI	DUCTILE IRON PIPE
SS	SANITARY SEWER LINE	ICV	IRRIGATION CONTROL VALVE
SSMH	SANITARY SEWER MANHOLE	(M)	MEASURED
SMH	STORM MANHOLE	MBL	MINIMUM BUILDING LINE
15" R.C.P.	STORM SEWER	NCF	NAIL AND CAP FOUND
SIGN	STREET SIGN	NWF	NAIL AND WASHER FOUND
TMH	TELEPHONE MANHOLE	NWS	NAIL AND WASHER SET
TM	TELEPHONE MONUMENT	RB	REBAR FOUND
TB	TELEPHONE PEDESTAL	RCP	REINFORCED CONCRETE PIPE
	TREELINE	RRS	RAILROAD SPIKE
	WATER LINE		
	WATER METER		
	WATER VALVE		

Scale 1" = 50'

PADBURY LANE
50' ROW

BENDLE LANE

BRANSBY DRIVE

CECIL DRIVE

PHASE LINE

REQ'D 15' UTILITY EASEMENT

REQ'D 30" CURB AND GUTTER (TYP.)

REQ'D 4' SIDEWALK (TYP.)

REQ'D HC RAMP (TYP.)

REQ'D STOP SIGN AND STREET SIGNAGE (TYP.)

STA: 2+90.01 CECIL DRIVE
STA: 13+56.92 BENDLE LANE
N:1746398.59
E:2175478.87

STA: 0+00 CECIL DRIVE
STA: 45+54.27 SHERRI STREET
N:1746400.06
E:2175188.87

PT=44.29.94

PC=43.27.87

PROPERTY LINE

003

PUGH WRIGHT MCANALLY INC.
CIVIL ENGINEERS
310 8th AVENUE NE -- PO BOX 2419 -- DECATUR, AL -- (256) 353-3937
Pugh Wright McAnally, Inc. www.pughwrightmcanally.com

REVISIONS

Rev#	Description	Date
5		
4		
3		
2		
1		

DR HORTON
DAVIS PRESERVE - PHASE 2
LIMESTONE COUNTY
SECTION 11, TOWNSHIP 3 SOUTH, RANGE 3 WEST
LIMESTONE COUNTY, ALABAMA

SITE GEOMETRY AND LAYOUT PLAN

Date: 04/12/2024
Drawn By: GGL
Approved By: NLT
Scale: 1":50'

Sign/Seal
ALABAMA LICENSED NO. 30456 PROFESSIONAL ENGINEER
04/12/2024
NATHAN L. TOMBERLIN

Job Number:
537-24

Sheet Number:
C2.1

NOTE

EXISTING UTILITIES ARE SHOWN AS APPROXIMATE LOCATIONS AND SHOULD BE FIELD VERIFIED.

CONTROL:

BM: N:1748006.49 E:2175532.71 Z:684.98

CP#1: N:1747952.67 E:2175927.95 Z:693.30

CP#2: N:1747957.15 E:2175047.90 Z:683.53

LEGEND

CW	CHAIN LINK FENCE	CIPF	CAPPED IRON PIN FOUND
DG	DOWN GUY	CIPS	CAPPED IRON PIN SET
FH	FIRE HYDRANT	CM	CONCRETE MONUMENT
GAS	GAS LINE	CMP	CORRIGATED METAL PIPE
GV	GAS VALVE	CP	CONTROL POINT SET
LP	LIGHT POLE	CS	COTTON SPINDLE FOUND
OHE	OVERHEAD ELECTRIC	(D)	DEED
PP	POWER POLE	DI	DUCTILE IRON PIPE
SS	SANITARY SEWER LINE	ICV	IRRIGATION CONTROL VALVE
SSMH	SANITARY SEWER MANHOLE	(M)	MEASURED
SMH	STORM MANHOLE	MBL	MINIMUM BUILDING LINE
15" R.C.P.	STORM SEWER	NCF	NAIL AND CAP FOUND
SIGN	STREET SIGN	NWF	NAIL AND WASHER FOUND
TMH	TELEPHONE MANHOLE	NWS	NAIL AND WASHER SET
TM	TELEPHONE MONUMENT	RB	REBAR FOUND
TB	TELEPHONE PEDESTAL	RCP	REINFORCED CONCRETE PIPE
	TREELINE	RRS	RAILROAD SPIKE
	WATER LINE		
	WATER METER		
	WATER VALVE		

Scale 1" = 50'

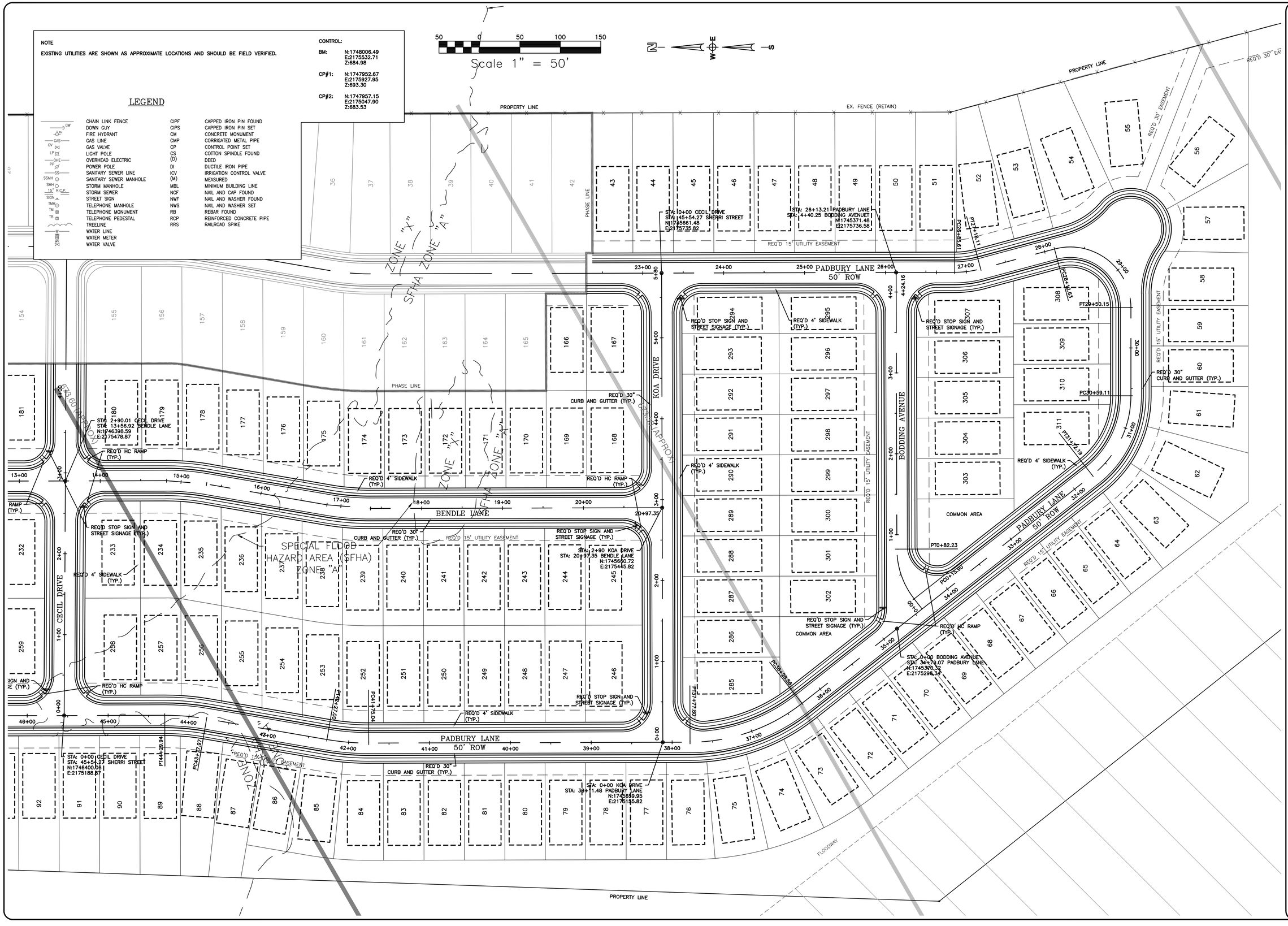

PUGH WRIGHT MCANALLY INC. CIVIL ENGINEERS

310 8th AVENUE NE -- PO BOX 2419 -- DECATUR, AL -- (256) 353-3937

Pugh Wright McAnally, Inc. www.pughwrightmcanally.com

REVISIONS

Rev#	Description	Date
5		
4		
3		
2		
1		

DR HORTON
DAVIS PRESERVE - PHASE 2
LIMESTONE COUNTY
SECTION 11, TOWNSHIP 3 SOUTH, RANGE 3 WEST
LIMESTONE COUNTY, ALABAMA

SITE GEOMETRY AND LAYOUT PLAN

Date: 04/12/2024
Drawn By: GGL
Approved By: NLT
Scale: 1":50'

Sign/Seal
ALABAMA LICENSED
NO. 30456 PROFESSIONAL ENGINEER
04/12/2024
NATHAN L. TOMBERLIN

Job Number: 537-24

Sheet Number: C2.2

NOTE

EXISTING UTILITIES ARE SHOWN AS APPROXIMATE LOCATIONS AND SHOULD BE FIELD VERIFIED.

CONTROL:

BM: N:1748006.49 E:2175532.71 Z:684.98

CP#1: N:1747952.67 E:2175927.95 Z:693.30

CP#2: N:1747957.15 E:2175047.90 Z:683.53

LEGEND

	CHAIN LINK FENCE	CIPF	CAPPED IRON PIN FOUND
GW	DOWN GUY	CIPS	CAPPED IRON PIN SET
FH	FIRE HYDRANT	CM	CONCRETE MONUMENT
GAS	GAS LINE	CMP	CORRIGATED METAL PIPE
GV	GAS VALVE	CP	CONTROL POINT SET
LP	LIGHT POLE	CS	COTTON SPINDLE FOUND
OHE	OVERHEAD ELECTRIC	(D)	DEED
PP	POWER POLE	DI	DUCTILE IRON PIPE
SS	SANITARY SEWER LINE	ICV	IRRIGATION CONTROL VALVE
SSMH	SANITARY SEWER MANHOLE	(M)	MEASURED
SMH	STORM MANHOLE	MBL	MINIMUM BUILDING LINE
15" R.C.P.	STORM SEWER	NCF	NAIL AND CAP FOUND
SIGN	STREET SIGN	NWF	NAIL AND WASHER FOUND
TMH	TELEPHONE MANHOLE	NWS	NAIL AND WASHER SET
TM	TELEPHONE MONUMENT	RB	REBAR FOUND
TB	TELEPHONE PEDESTAL	RCP	REINFORCED CONCRETE PIPE
	TREELINE	RRS	RAILROAD SPIKE
	WATER LINE		
	WATER METER		
	WATER VALVE		

Scale 1" = 50'

PADBURY LANE 50' ROW

BENDIT LANE

BRAMSBY DRIVE

CECIL DRIVE

PHASE LINE

PROPERTY LINE

REQ'D 15' UTILITY EASEMENT

PUGH WRIGHT MCANALLY INC. CIVIL ENGINEERS

310 8th AVENUE NE -- PO BOX 2419 -- DECATUR, AL -- (256) 353-3937
Pugh Wright McAnally, Inc. www.pughwrightmcanally.com

REVISIONS

Rev#	Description	Date
5		
4		
3		
2		
1		

DR HORTON
DAVIS PRESERVE - PHASE 2
LIMESTONE COUNTY
SECTION 11, TOWNSHIP 3 SOUTH, RANGE 3 WEST
LIMESTONE COUNTY, ALABAMA

GRADING PLAN

Date: 04/12/2024
Drawn By: GGL
Approved By: NLT
Scale: 1":50'

Sign/Seal
ALABAMA LICENSED NO. 30456 PROFESSIONAL ENGINEER 04/12/2024 NATHAN L. TOMBERLIN

Job Number:
537-24

Sheet Number:
C3.0

NOTE

EXISTING UTILITIES ARE SHOWN AS APPROXIMATE LOCATIONS AND SHOULD BE FIELD VERIFIED.

CONTROL:

BM: N:1748006.49 E:2175532.71 Z:684.98

CP#1: N:1747952.67 E:2175927.95 Z:693.30

CP#2: N:1747957.15 E:2175047.90 Z:683.53

LEGEND

	CHAIN LINK FENCE	CIPF	CAPPED IRON PIN FOUND
GW	DOWN GUY	CIPS	CAPPED IRON PIN SET
FH	FIRE HYDRANT	CM	CONCRETE MONUMENT
GAS	GAS LINE	CMP	CORRIGATED METAL PIPE
GV	GAS VALVE	CP	CONTROL POINT SET
LP	LIGHT POLE	CS	COTTON SPINDLE FOUND
OHE	OVERHEAD ELECTRIC	(D)	DEED
PP	POWER POLE	DI	DUCTILE IRON PIPE
SS	SANITARY SEWER LINE	ICV	IRRIGATION CONTROL VALVE
SSMH	SANITARY SEWER MANHOLE	(M)	MEASURED
SMH	STORM MANHOLE	MBL	MINIMUM BUILDING LINE
15" R.C.P.	STORM SEWER	NCF	NAIL AND CAP FOUND
SIGN	STREET SIGN	NWF	NAIL AND WASHER FOUND
TMH	TELEPHONE MANHOLE	NWS	NAIL AND WASHER SET
TM	TELEPHONE MONUMENT	RB	REBAR FOUND
TB	TELEPHONE PEDESTAL	RCP	REINFORCED CONCRETE PIPE
	TREELINE	RRS	RAILROAD SPIKE
W	WATER LINE		
	WATER METER		
	WATER VALVE		

Scale 1" = 50'

N W E S

PROPERTY LINE

EX. FENCE (RETAIN)

PHASE LINE

PADBURY LANE 50' ROW

KOA DRIVE

BODDING AVENUE

BENDLE LANE

SPECIAL FLOOD HAZARD AREA (SFHA) ZONE "AE"

REQ'D 15' UTILITY EASEMENT

REQ'D 30' DRAINAGE EASEMENT

13' MIN.

PAD: 675.50 · PAD: 676.50 · PAD: 674.50

PUGH WRIGHT MCANALLY INC.
CIVIL ENGINEERS
310 8th AVENUE NE -- PO BOX 2419 -- DECATUR, AL -- (256) 353-3937
Pugh Wright McAnally, Inc.
www.pughwrightmcanally.com

REVISIONS

Rev#	Description	Date
5		
4		
3		
2		
1		

DR HORTON
DAVIS PRESERVE - PHASE 2
LIMESTONE COUNTY
SECTION 11, TOWNSHIP 3 SOUTH, RANGE 3 WEST
LIMESTONE COUNTY, ALABAMA

GRADING PLAN

Date: 04/12/2024
Drawn By: GGL
Approved By: NLT
Scale: 1":50'

Sign/Seal
ALABAMA LICENSED NO. 30456 PROFESSIONAL ENGINEER
04/12/2024
NATHAN L. TOMBERLIN

Job Number:
537-24

Sheet Number:
C3.1

PUGH WRIGHT MCANALLY INC.
CIVIL ENGINEERS
310 8th AVENUE NE -- PO BOX 2419 -- DECATUR, AL -- (256) 353-3937
Pugh Wright McAnally, Inc. www.pughwrightmcanally.com

REVISIONS

Rev#	Description	Date
1	--	--
2	--	--
3	--	--
4	--	--
5	--	--

DR HORTON
DAVIS PRESERVE - PHASE 2
LIMESTONE COUNTY
SECTION 11, TOWNSHIP 3 SOUTH, RANGE 3 WEST
LIMESTONE COUNTY, ALABAMA

DRAINAGE PLAN

Date: 04/12/2024
Drawn By: GGL
Approved By: NLT
Scale: 1":50'

Sign/Seal
ALABAMA LICENSED NO. 30456 PROFESSIONAL ENGINEER 04/12/2024 NATHAN L. TOMBERLIN

Job Number:
537-24

Sheet Number:
C3.2

PUGH WRIGHT MCANALLY INC.
CIVIL ENGINEERS
310 8th AVENUE NE -- PO BOX 2419 -- DECATUR, AL -- (256) 353-3937
Pugh Wright McAnally, Inc. www.pughwrightmcanally.com

REVISIONS

Rev#	Description	Date
5	--	--
4	--	--
3	--	--
2	--	--
1	--	--

DR HORTON
DAVIS PRESERVE - PHASE 2
LIMESTONE COUNTY
SECTION 11, TOWNSHIP 3 SOUTH, RANGE 3 WEST
LIMESTONE COUNTY, ALABAMA

DRAINAGE PLAN

Date: 04/12/2024
Drawn By: GGL
Approved By: NLT
Scale: 1":50'

Sign/Seal
ALABAMA
LICENSED
NO. 30456
PROFESSIONAL
04/12/2024
ENGINEER
NATHAN L. TOMBERLIN

Job Number:
537-24

Sheet Number:
C3.3

CONTROL:

BM: N:1746006.49
E:2175532.71
Z:684.98

CP#1: N:1747952.67
E:2175927.95
Z:693.30

CP#2: N:1747957.15
E:2175047.90
Z:683.53

50 0 50 100 150

Scale 1" = 50'

N W E S

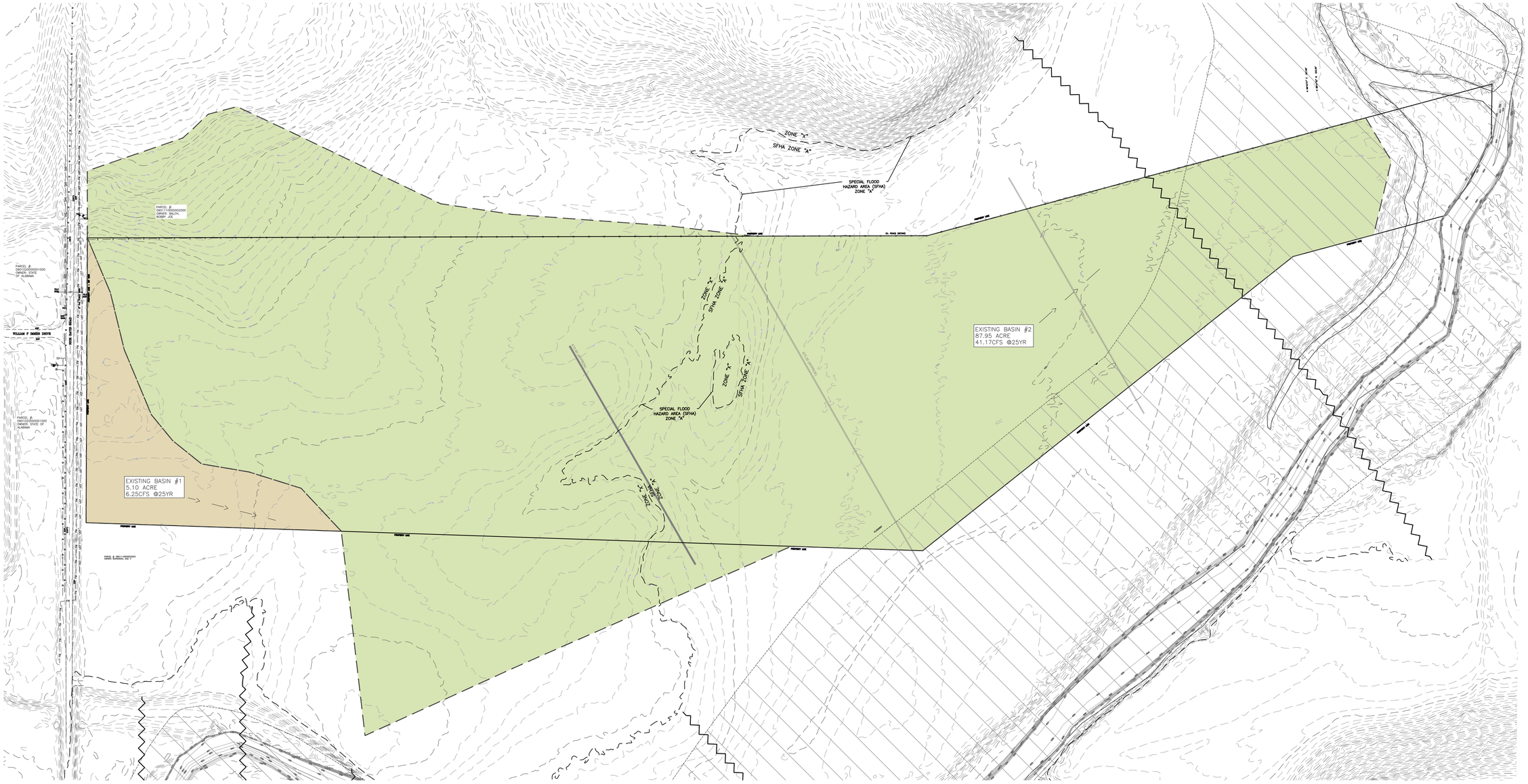

PUGH WRIGHT MCANALLY INC.
CIVIL ENGINEERS

310 8th AVENUE NE -- PO BOX 2419 -- DECATUR, AL -- (256) 353-3937
Pugh Wright McAnally, Inc. www.pughwrightmcanally.com

REVISIONS

Rev#	Description	Date
5		
4		
3		
2		
1		

DR HORTON
DAVIS PRESERVE - PHASE 2
LIMESTONE COUNTY
SECTION 11, TOWNSHIP 3 SOUTH, RANGE 3 WEST
LIMESTONE COUNTY, ALABAMA

EXISTING DRAINAGE BASINS

Date: 04/12/2024
Drawn By: GGL
Approved By: NLT
Scale: 1":50'

Sign/Seal
ALABAMA LICENSED NO. 30456 PROFESSIONAL ENGINEER 04/12/2024 NATHAN L. TOMBERLIN

Job Number:
537-24

Sheet Number:
C3.4

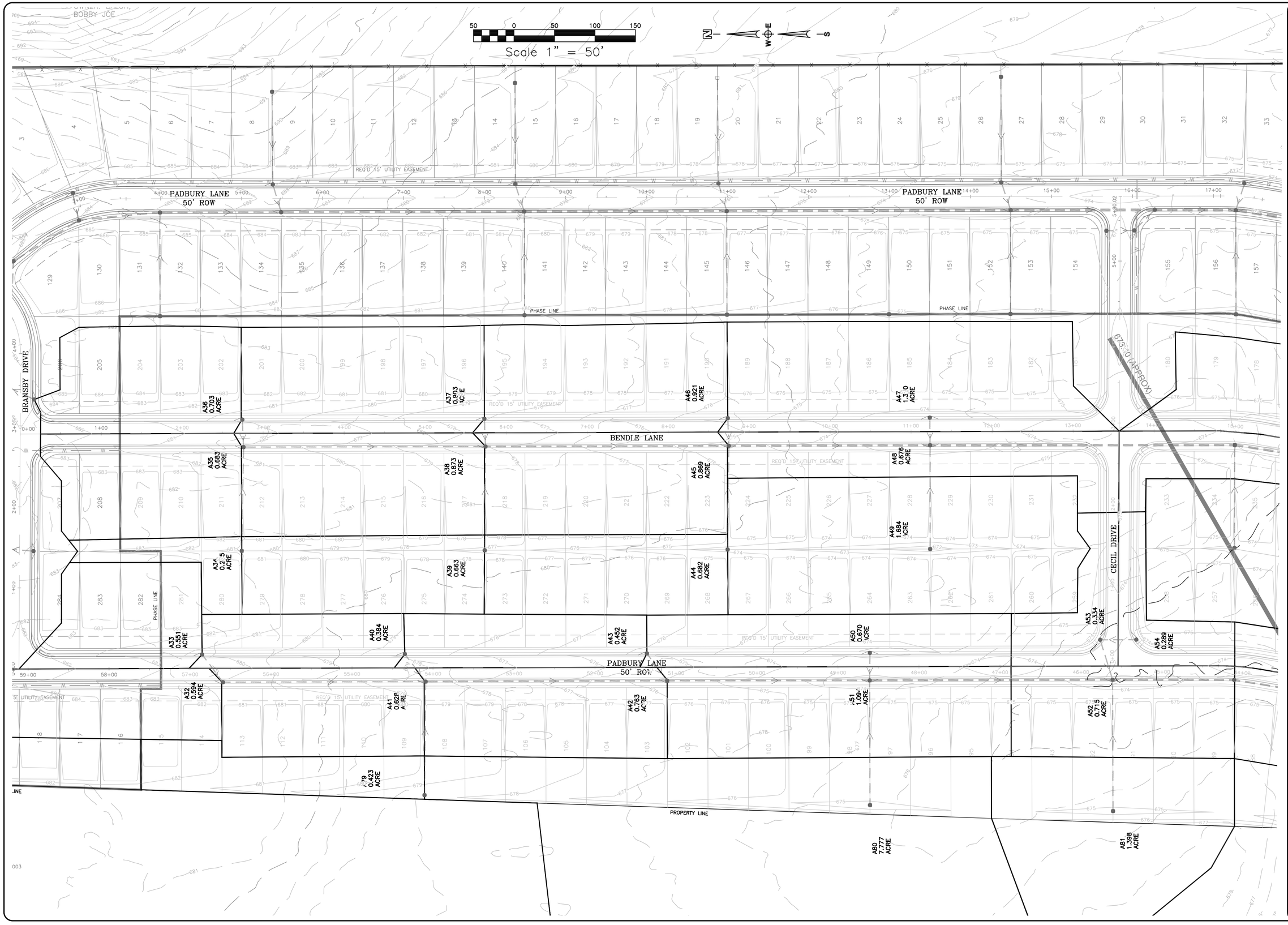

PUGH WRIGHT MCANALLY INC.
CIVIL ENGINEERS
310 8th AVENUE NE -- PO BOX 2419 -- DECATUR, AL -- (256) 353-3937
Pugh Wright McAnally, Inc. www.pughwrightmcanally.com

REVISIONS

Rev#	Description	Date
5	..	..
4	..	..
3	..	..
2	..	..
1	..	..

DR HORTON
DAVIS PRESERVE - PHASE 2
LIMESTONE COUNTY
SECTION 11, TOWNSHIP 3 SOUTH, RANGE 3 WEST
LIMESTONE COUNTY, ALABAMA

DEVELOPED DRAINAGE BASINS

Date: 04/12/2024
Drawn By: GGL
Approved By: NLT
Scale: 1":50'

Sign/Seal
ALABAMA LICENSED NO. 30456 PROFESSIONAL ENGINEER
04/12/2024
NATHAN L. TOMBERLIN

Job Number:
537-24

Sheet Number:
C3.5

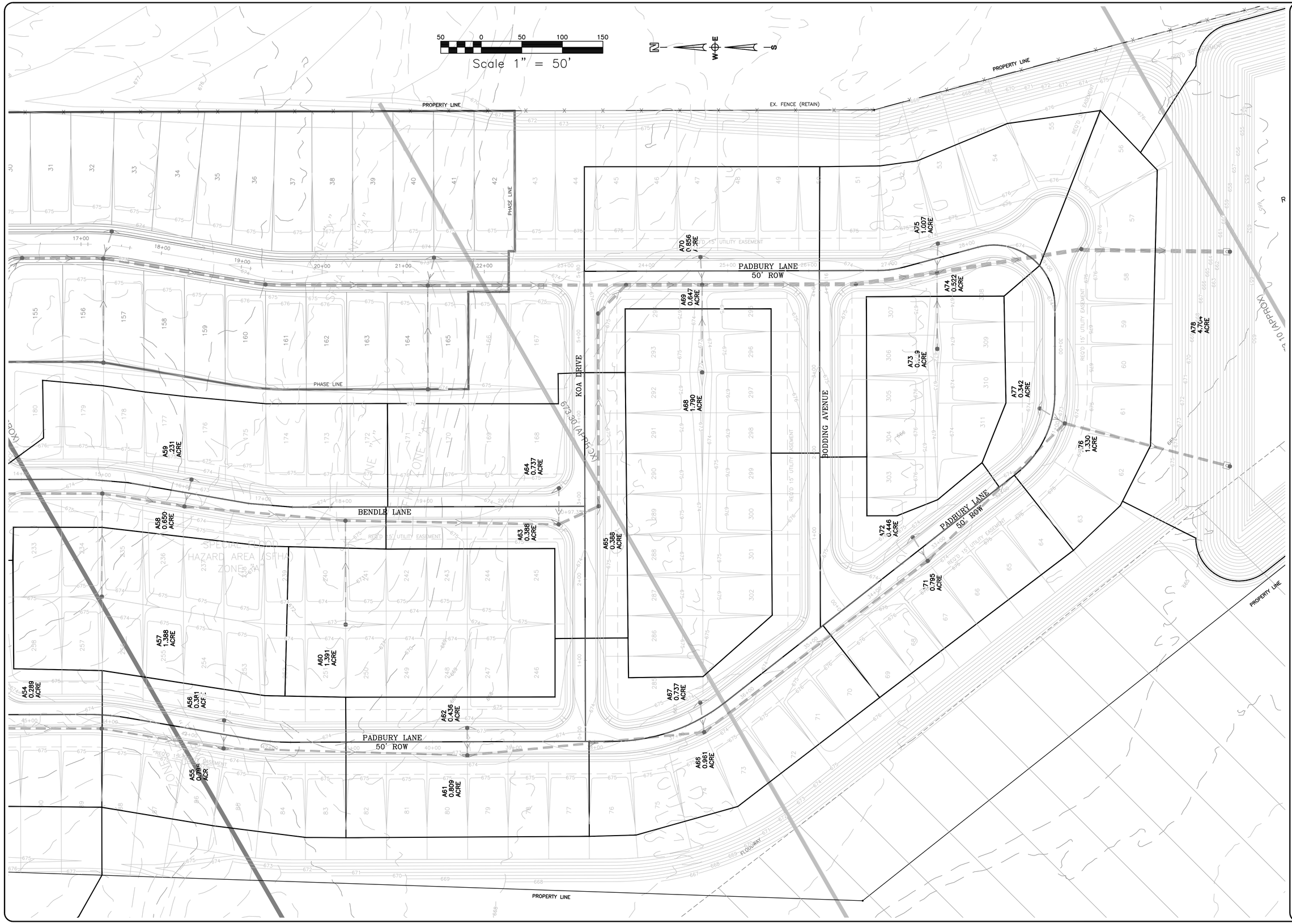

PUGH WRIGHT MCANALLY INC.
CIVIL ENGINEERS
310 8th AVENUE NE -- PO BOX 2419 -- DECATUR, AL -- (256) 353-3937
Pugh Wright McAnally, Inc. www.pughwrightmcanally.com

REVISIONS

Rev#	Description	Date
5	--	--
4	--	--
3	--	--
2	--	--
1	--	--

DR HORTON
DAVIS PRESERVE - PHASE 2
LIMESTONE COUNTY
SECTION 11, TOWNSHIP 3 SOUTH, RANGE 3 WEST
LIMESTONE COUNTY, ALABAMA

DEVELOPED DRAINAGE BASINS

Date: 04/12/2024
Drawn By: GGL
Approved By: NLT
Scale: 1":50'

Sign/Seal
ALABAMA LICENSED NO. 30456 PROFESSIONAL ENGINEER 04/12/2024 NATHAN L. TOMBERLIN

Job Number:
537-24

Sheet Number:
C3.6

LCWSA SEWER NOTES:

1. CONTRACTOR MUST VERIFY THE LOCATION OF EXISTING UTILITIES PRIOR TO BEGINNING CONSTRUCTION.

2. ALL SEWER INSTALLATIONS AND MATERIALS ARE TO BE IN ACCORDANCE WITH THE LATEST APPROVED LIMESTONE COUNTY WATER AND SEWER AUTHORITY (LCWSA) STANDARD SPECIFICATION AND DESIGN CRITERIA.

3. ALL CONSTRUCTION MATERIALS MUST BE SUBMITTED TO LCWSA FOR APPROVAL PRIOR TO ORDERING.

4. SEPARATION BETWEEN SANITARY SEWER AND PRIMARY ELECTRICAL LINES SHALL BE A MINIMUM OF 10.00 FT (EDGE TO EDGE). SANITARY SEWERS CROSSING UNDER STORM DRAINS SHALL HAVE A MINIMUM OF 18" VERTICAL CLEARANCE. WATER MAINS SHALL HAVE A 5.00 FT HORIZONTAL AND 2.00 FT VERTICAL CLEARANCE FROM SANITARY SEWERS. SEWER PIPES SHALL PASS BENEATH WATER LINES.

5. AT LOCATIONS WHERE MULTIPLE SERVICE LATERALS ENTER MANHOLE, COORDINATE WITH MANUFACTURER TO ENSURE ADEQUATE SIDEWALL SEPARATION IS MAINTAINED BETWEEN CONNECTIONS.

6. NO SERVICE LATERALS TO BE INSTALLED ON THE SEWER MAIN WITHIN 6' OF A MANHOLE.

7. AN LCWSA REPRESENTATIVE MUST ALWAYS BE ON SITE WHEN TYING INTO AN EXISTING MANHOLE.

8. SANITARY SEWER LINES SHALL HAVE A MINIMUM OF 36" OF COVER IN NON-TRAFFIC AREA AND 48" IN PAVED AREAS SUBJECTED TO VEHICULAR TRAFFIC.

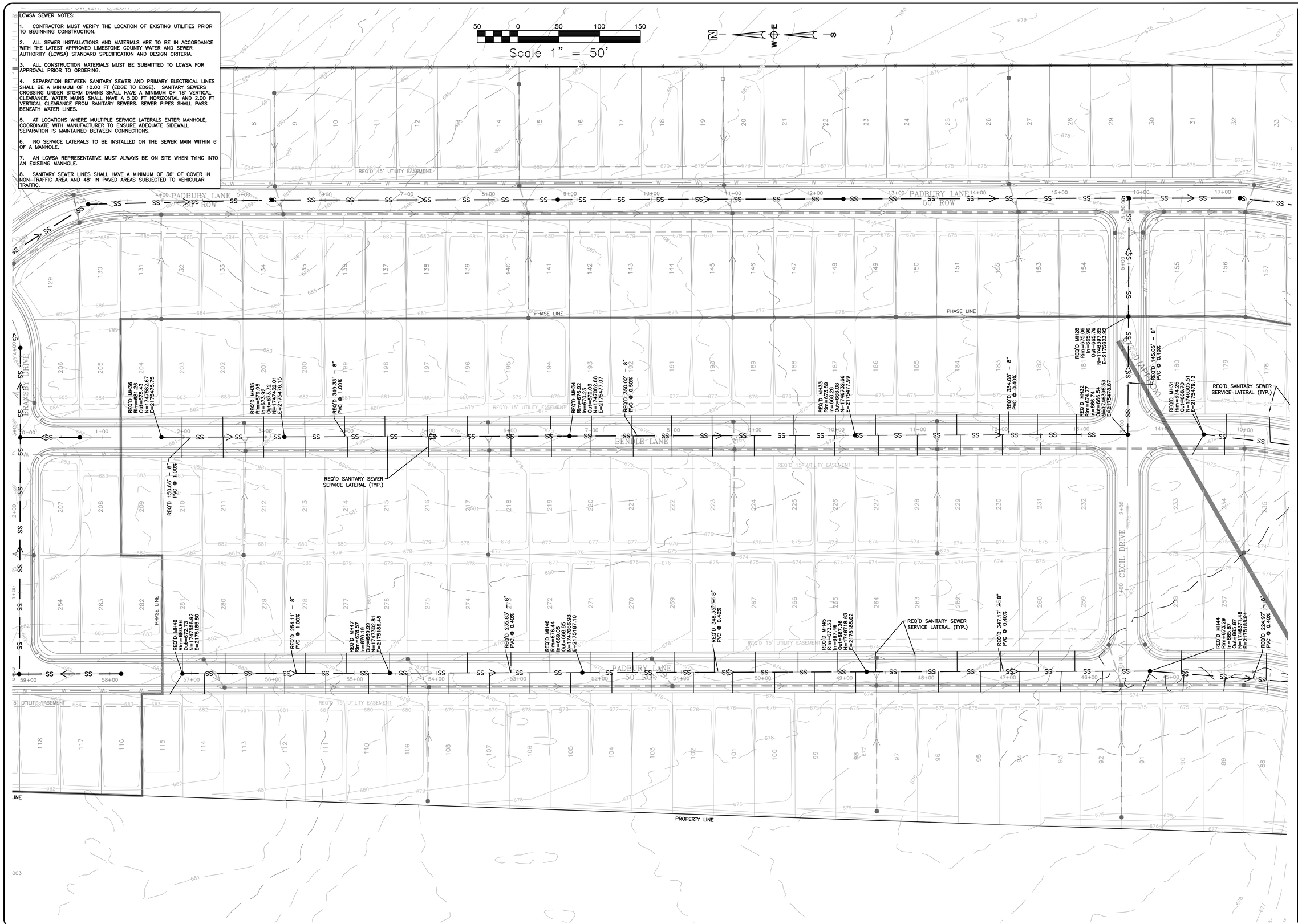

PUGH WRIGHT MCANALLY INC.
CIVIL ENGINEERS
310 8th AVENUE NE -- PO BOX 2419 -- DECATUR, AL -- (256) 353-3937
Pugh Wright McAnally, Inc. www.pughwrightmcanally.com

REVISIONS

Rev#	Description	Date
5		
4		
3		
2		
1		

DR HORTON
DAVIS PRESERVE - PHASE 2
LIMESTONE COUNTY
SECTION 11, TOWNSHIP 3 SOUTH, RANGE 3 WEST
LIMESTONE COUNTY, ALABAMA

SANITARY SEWER PLAN

Date: 04/12/2024
Drawn By: GGL
Approved By: NLT
Scale: 1":50'

Sign/Seal
ALABAMA LICENSED NO. 30456 PROFESSIONAL ENGINEER 04/12/2024 NATHAN L. TOMBERLIN

Job Number:
537-24

Sheet Number:
C4.0

LCWSA SEWER NOTES:

1. CONTRACTOR MUST VERIFY THE LOCATION OF EXISTING UTILITIES PRIOR TO BEGINNING CONSTRUCTION.

2. ALL SEWER INSTALLATIONS AND MATERIALS ARE TO BE IN ACCORDANCE WITH THE LATEST APPROVED LIMESTONE COUNTY WATER AND SEWER AUTHORITY (LCWSA) STANDARD SPECIFICATION AND DESIGN CRITERIA.

3. ALL CONSTRUCTION MATERIALS MUST BE SUBMITTED TO LCWSA FOR APPROVAL PRIOR TO ORDERING.

4. SEPARATION BETWEEN SANITARY SEWER AND PRIMARY ELECTRICAL LINES SHALL BE A MINIMUM OF 10.00 FT (EDGE TO EDGE). SANITARY SEWERS CROSSING UNDER STORM DRAINS SHALL HAVE A MINIMUM OF 18" VERTICAL CLEARANCE. WATER MAINS SHALL HAVE A 5.00 FT HORIZONTAL AND 2.00 FT VERTICAL CLEARANCE FROM SANITARY SEWERS. SEWER PIPES SHALL PASS BENEATH WATER LINES.

5. AT LOCATIONS WHERE MULTIPLE SERVICE LATERALS ENTER MANHOLE, COORDINATE WITH MANUFACTURER TO ENSURE ADEQUATE SIDEWALL SEPARATION IS MAINTAINED BETWEEN CONNECTIONS.

6. NO SERVICE LATERALS TO BE INSTALLED ON THE SEWER MAIN WITHIN 6' OF A MANHOLE.

7. AN LCWSA REPRESENTATIVE MUST ALWAYS BE ON SITE WHEN TYING INTO AN EXISTING MANHOLE.

8. SANITARY SEWER LINES SHALL HAVE A MINIMUM OF 36" OF COVER IN NON-TRAFFIC AREA AND 48" IN PAVED AREAS SUBJECTED TO VEHICULAR TRAFFIC.

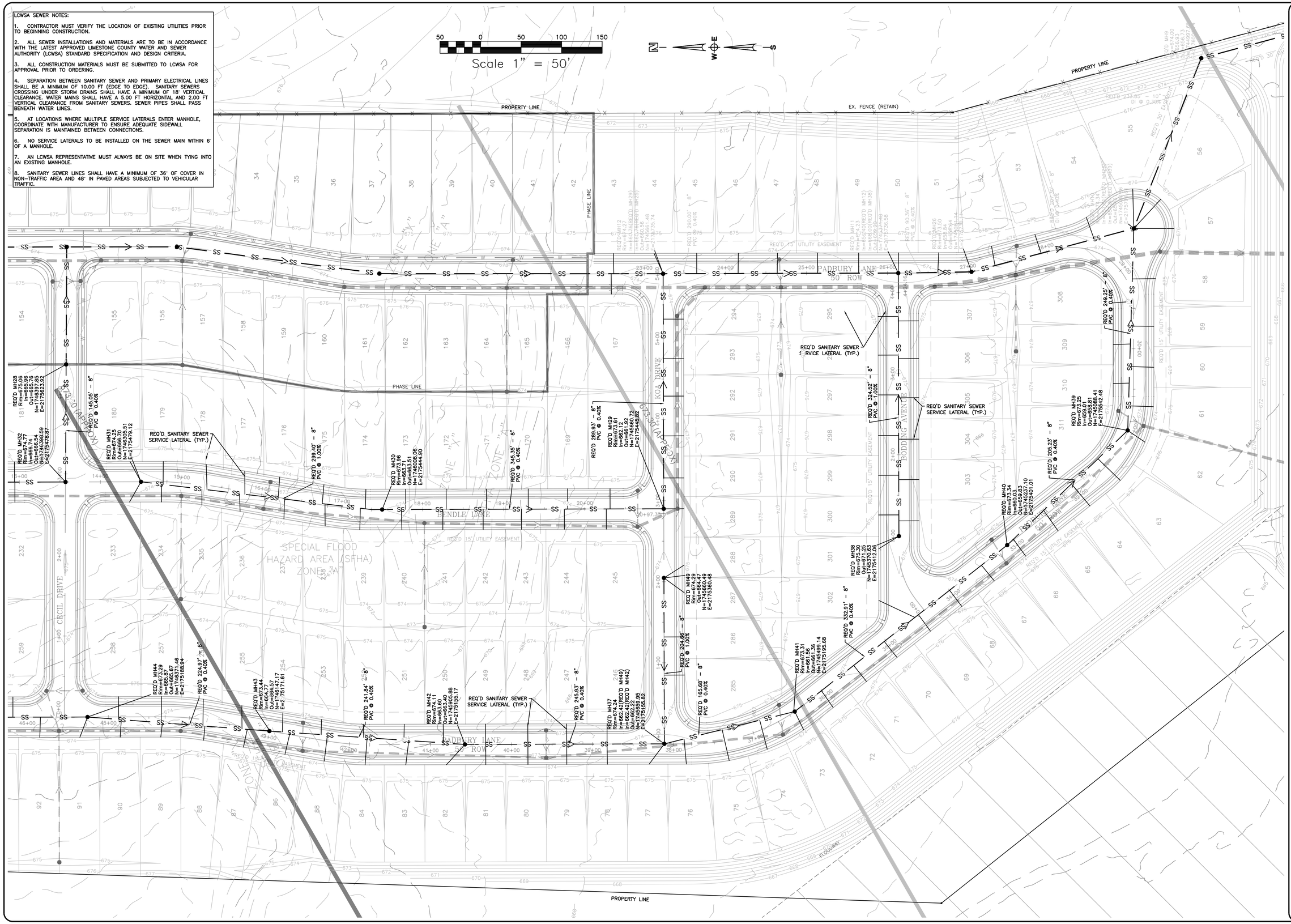

PUGH WRIGHT MCANALLY INC.
CIVIL ENGINEERS
310 8th AVENUE NE -- PO BOX 2419 -- DECATUR, AL -- (256) 353-3937
Pugh Wright McAnally, Inc. www.pughwrightmcanally.com

REVISIONS

Rev#	Description	Date
5		
4		
3		
2		
1		

DR HORTON
DAVIS PRESERVE - PHASE 2
LIMESTONE COUNTY
SECTION 11, TOWNSHIP 3 SOUTH, RANGE 3 WEST
LIMESTONE COUNTY, ALABAMA

SANITARY SEWER PLAN

Date: 04/12/2024
Drawn By: GGL
Approved By: NLT
Scale: 1":50'

Sign/Seal
ALABAMA LICENSED NO. 30456 PROFESSIONAL ENGINEER 04/12/2024 NATHAN L. TOMBERLIN

Job Number:
537-24

Sheet Number:
C4.1

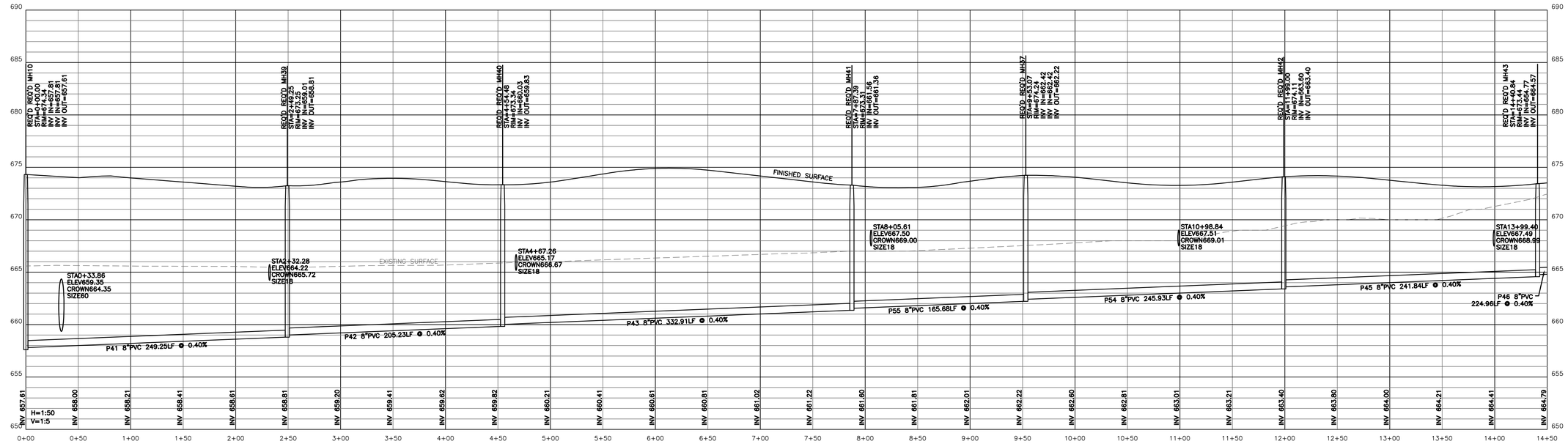

SANITARY SEWER PROFILE
STR: SSMH43 – SSMH10

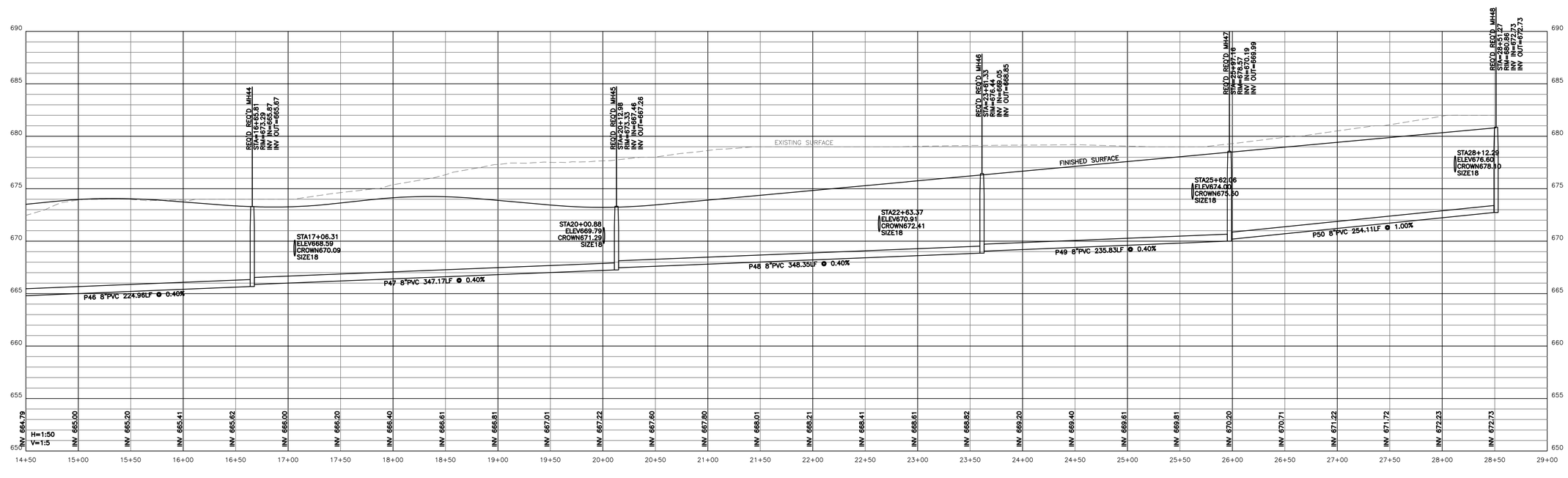

SANITARY SEWER PROFILE
STR: SSMH48 – SSMH44

PUGH WRIGHT MCANALLY INC.
CIVIL ENGINEERS
310 8th AVENUE NE – PO BOX 2419 – DECATUR, AL – (256) 353-3937
Pugh Wright McAnally, Inc. www.pughwrightmcanally.com

REVISIONS

Rev#	Description	Date
5		
4		
3		
2		
1		

DR HORTON
DAVIS PRESERVE - PHASE 2
LIMESTONE COUNTY
SECTION 11, TOWNSHIP 3 SOUTH, RANGE 3 WEST
LIMESTONE COUNTY, ALABAMA

SANITARY SEWER PROFILES

Date: 04/12/2024
Drawn By: GGL
Approved By: NLT
Scale: HOR. 1":50'
VERT. 1":5'

Sign/Seal
ALABAMA LICENSED NO. 30456 PROFESSIONAL ENGINEER 04/12/2024 NATHAN L. TOMBERLIN

Job Number:
537–24

Sheet Number:
C4.2

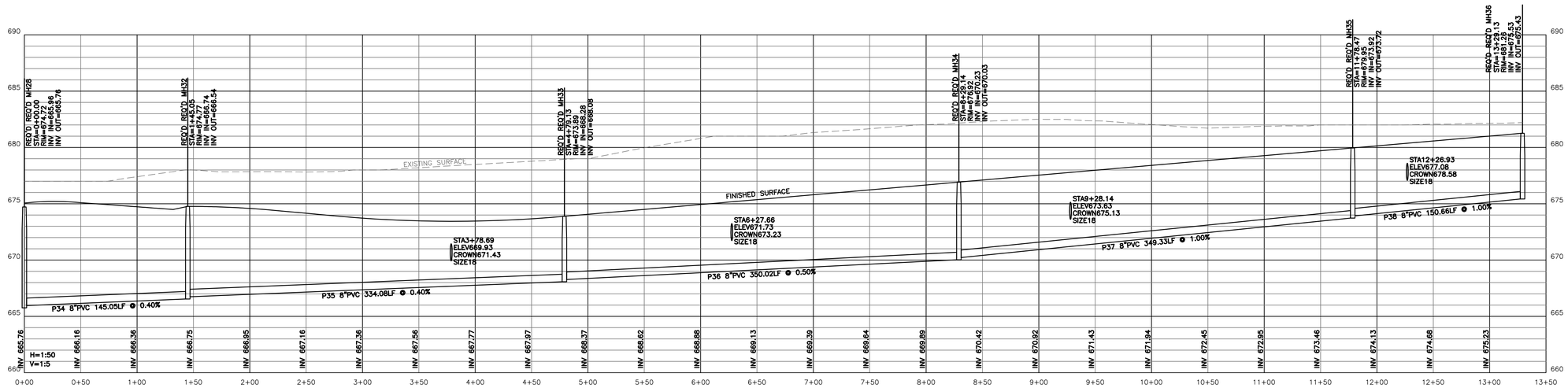

SANITARY SEWER PROFILE
STR: SSMH36 – SSMH28

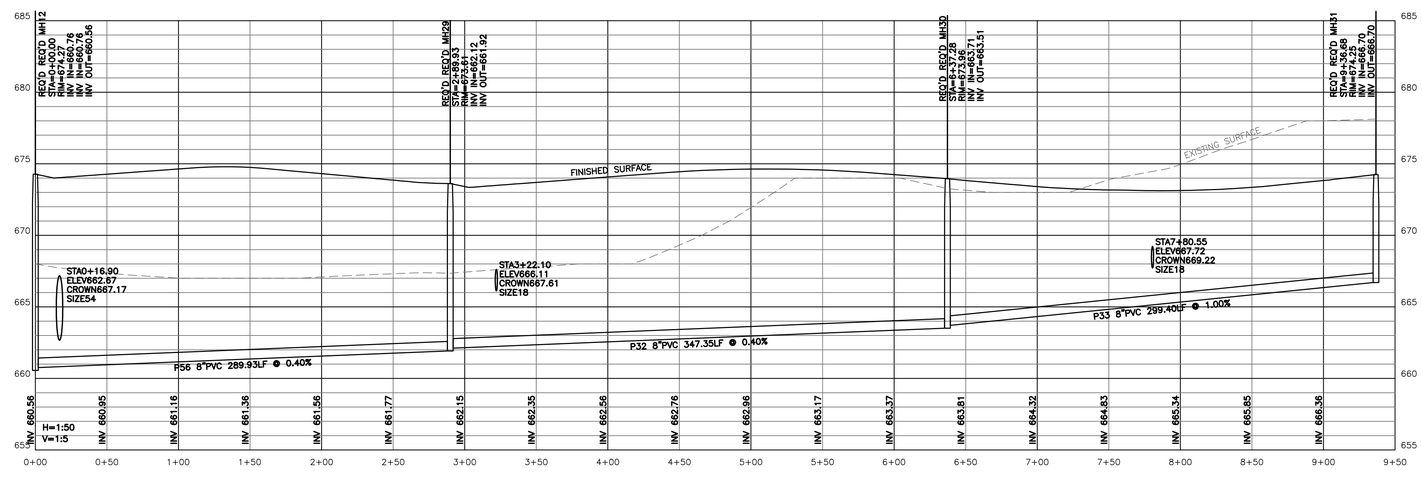

SANITARY SEWER PROFILE
STR: SSMH31 – SSMH12

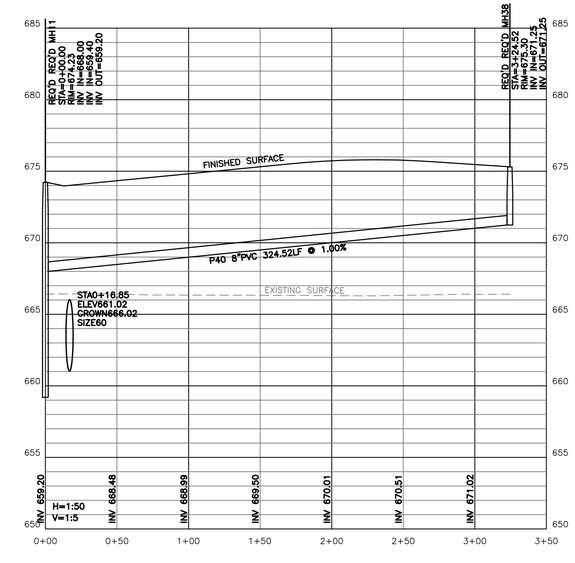

SANITARY SEWER PROFILE
STR: SSMH38 – SSMH11

PUGH WRIGHT MCNALLY INC.
CIVIL ENGINEERS
310 8th AVENUE NE – PO BOX 2419 – DECATUR, AL – (256) 353-3937
Pugh Wright McNally, Inc. www.pughwrightmcnally.com

REVISIONS

Rev#	Description	Date
5		
4		
3		
2		
1		

DR HORTON
DAVIS PRESERVE - PHASE 2
LIMESTONE COUNTY
SECTION 11, TOWNSHIP 3 SOUTH, RANGE 3 WEST
LIMESTONE COUNTY, ALABAMA

SANITARY SEWER PROFILES

Date: 04/12/2024
Drawn By: GGL
Approved By: NLT
Scale: HOR. 1":50'
VERT 1":5'

Sign/Seal
ALABAMA
LICENSED
NO. 30456
PROFESSIONAL
04/12/2024
ENGINEER
NATHAN L. TOMBERLIN

Job Number:
537–24

Sheet Number:
C4.3

PADBURY LANE
STA: 22+30.09 – 32+00

PUGH WRIGHT MCANALLY INC.
CIVIL ENGINEERS
310 8th AVENUE NE -- PO BOX 2419 -- DECATUR, AL -- (256) 353-3937
Pugh Wright McAnally, Inc. www.pughwrightmcanally.com

REVISIONS

Rev#	Description	Date
5		
4		
3		
2		
1		

DR HORTON
DAVIS PRESERVE - PHASE 2
LIMESTONE COUNTY
SECTION 11, TOWNSHIP 3 SOUTH, RANGE 3 WEST
LIMESTONE COUNTY, ALABAMA

PADBURY LANE PLAN AND PROFILE

Date: 04/12/2024
Drawn By: GGL
Approved By: NLT
Scale: HOR. 1":50'
VERT 1":5'

Sign/Seal
ALABAMA
LICENSED
NO. 30456
PROFESSIONAL
04/12/2024
ENGINEER
NATHAN L. TOMBERLIN

Job Number:
537–24

Sheet Number:
C5.0

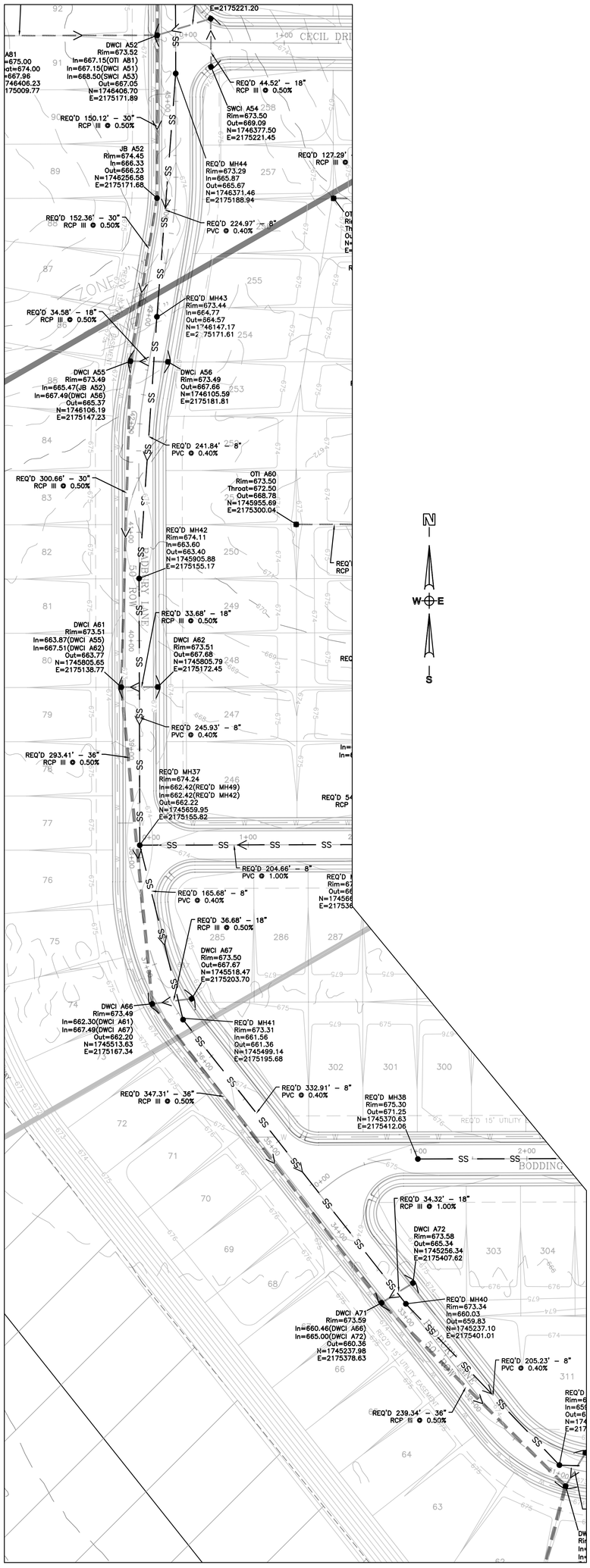

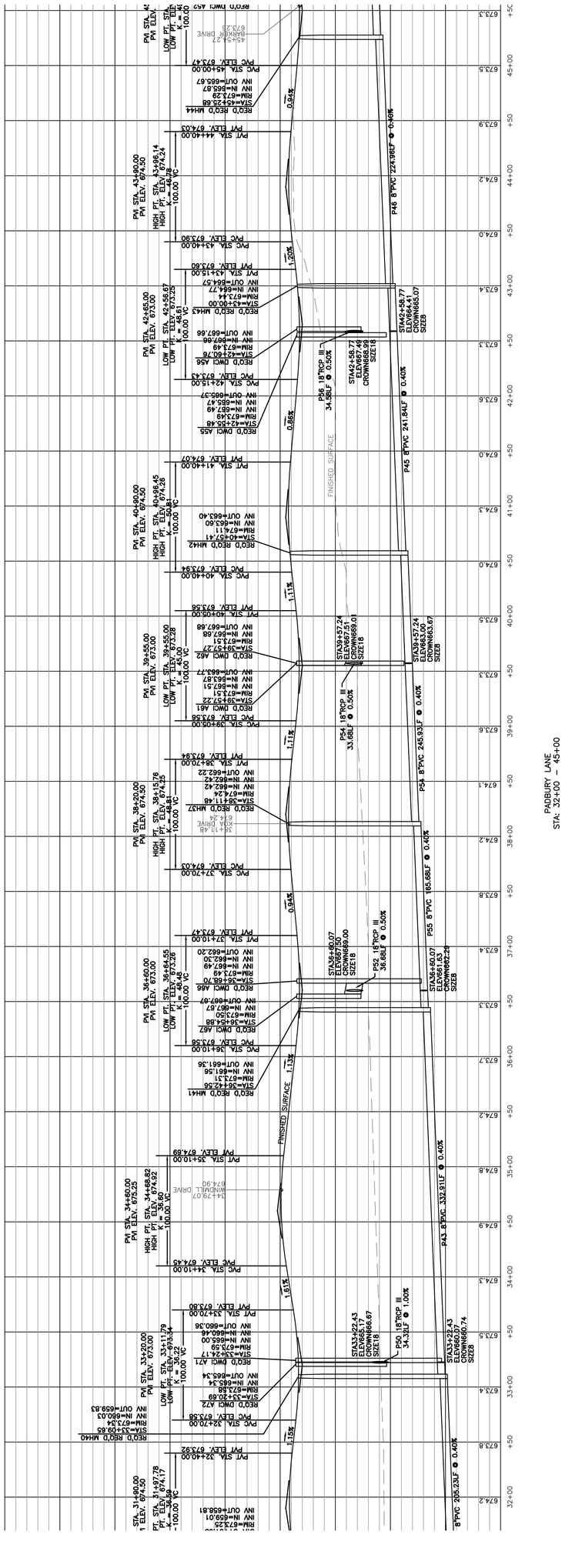

REVISIONS		
Rev#	Description	Date
1	"	"
2	"	"
3	"	"
4	"	"
5	"	"

DR HORTON
DAVIS PRESERVE - PHASE 2
LIMESTONE COUNTY
SECTION 11, TOWNSHIP 3 SOUTH, RANGE 3 WEST
LIMESTONE COUNTY, ALABAMA

PADBURY LANE PLAN AND PROFILE

Date: 04/12/2024
Drawn By: GGL
Approved By: NLT
Scale: HOR. 1"=50'
VERT 1"=5'

STATE OF ALABAMA
NATHAN L. TOTH
NO. 30406
PROFESSIONAL ENGINEER
04/12/2024

Job Number: 537-24

Sheet Number: C5.1

PUGH WRIGHT MCANALLY CIVIL ENGINEERS
310 8th AVENUE NE -- PO BOX 2419 -- DECATUR, AL -- (256) 353-3937
Pugh Wright McAnally, Inc. www.pughwrightmcanally.com

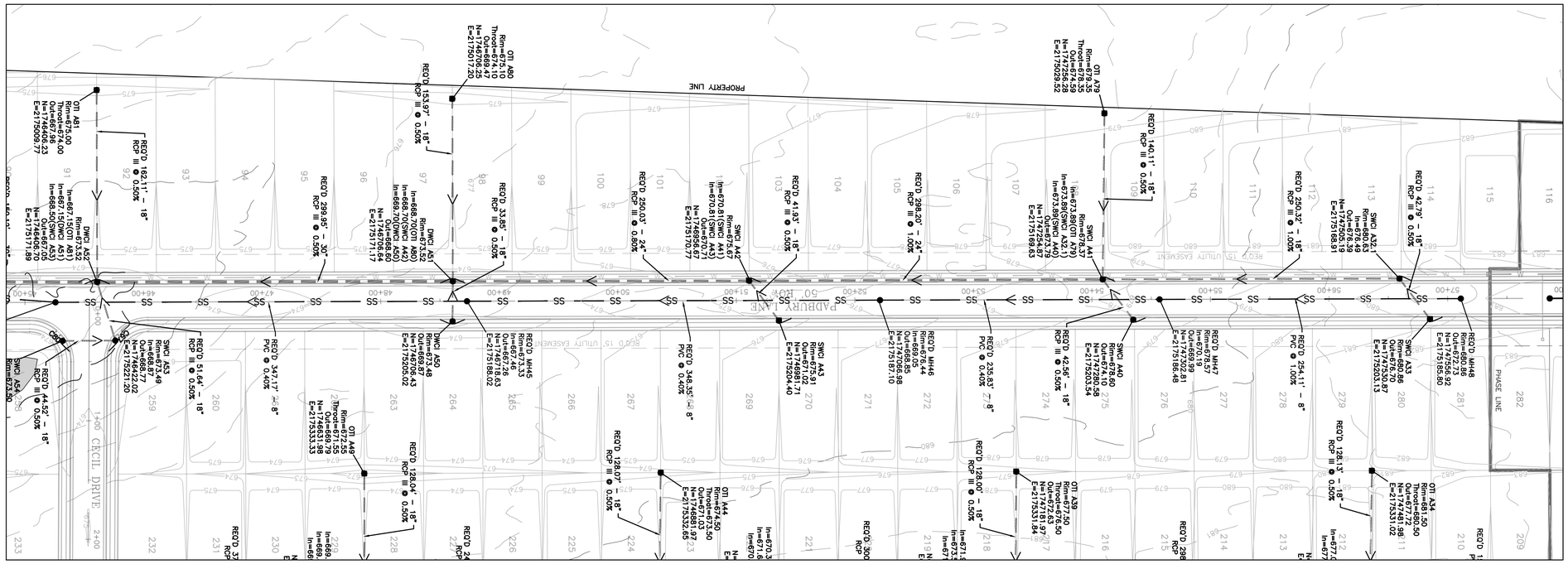

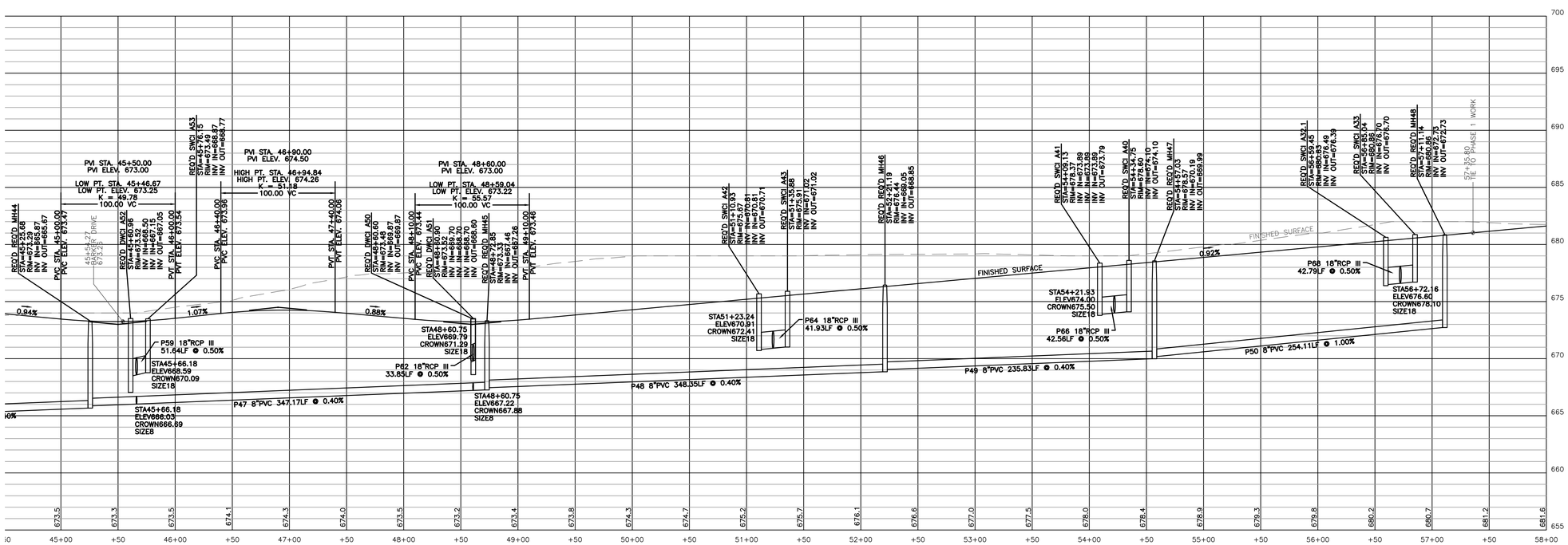

PADBURY LANE
STA: 45+00 – 57+35.80

PUGH WRIGHT MCANALLY INC.
CIVIL ENGINEERS
310 8th AVENUE NE -- PO BOX 2419 -- DECATUR, AL -- (256) 353-3937
Pugh Wright McAnally, Inc.
www.pughwrightmcanally.com

REVISIONS

Rev#	Description	Date
5	"	"
4	"	"
3	"	"
2	"	"
1	"	"

DR HORTON
DAVIS PRESERVE - PHASE 2
LIMESTONE COUNTY
SECTION 11, TOWNSHIP 3 SOUTH, RANGE 3 WEST
LIMESTONE COUNTY, ALABAMA

PADBURY LANE PLAN AND PROFILE

Date: 04/12/2024
Drawn By: GGL
Approved By: NLT
Scale: HOR. 1":50'
VERT 1":5'

Sign/Seal
ALABAMA LICENSED NO. 30456 PROFESSIONAL ENGINEER 04/12/2024 NATHAN L. TOMBERLIN

Job Number:
537-24

Sheet Number:
C5.2

CECIL DRIVE
STA: 0+00 – 4+35.09

PUGH WRIGHT MCANALLY INC.
CIVIL ENGINEERS
310 8th AVENUE NE – PO BOX 2419 – DECATUR, AL – (256) 353-3937
Pugh Wright McAnally, Inc. www.pughwrightmcanally.com

REVISIONS

Rev#	Description	Date
5		
4		
3		
2		
1		

DR HORTON
DAVIS PRESERVE - PHASE 2
LIMESTONE COUNTY
SECTION 11, TOWNSHIP 3 SOUTH, RANGE 3 WEST
LIMESTONE COUNTY, ALABAMA

CECIL DRIVE PLAN AND PROFILE

Date: 04/12/2024
Drawn By: GGL
Approved By: NLT
Scale: HOR. 1":50'
VERT 1":5'

Sign/Seal
ALABAMA
LICENSED
NO. 30456
PROFESSIONAL
04/12/2024
ENGINEER
NATHAN L. TOMBERLIN

Job Number:
537–24

Sheet Number:
C5.3

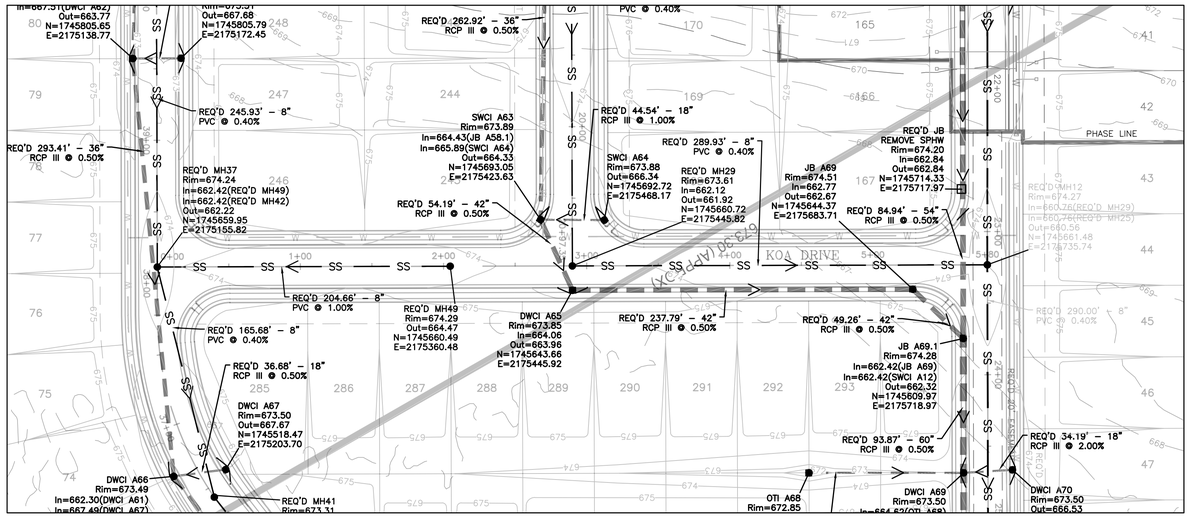

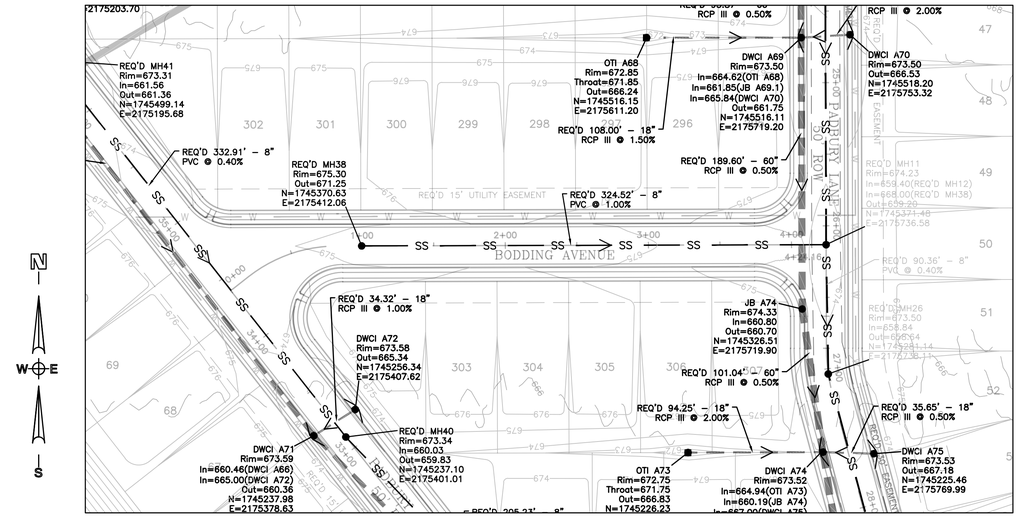

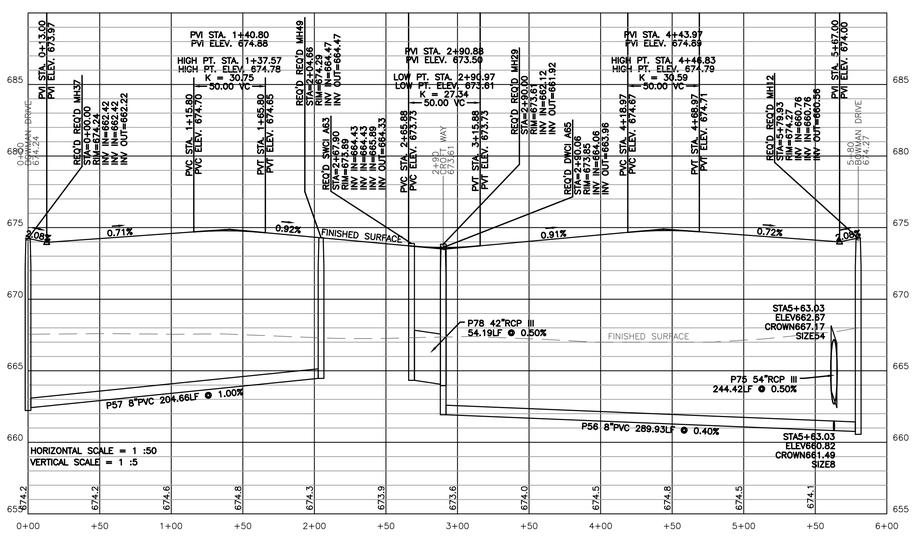

KOA DRIVE
STA: 0+00 – 5+80

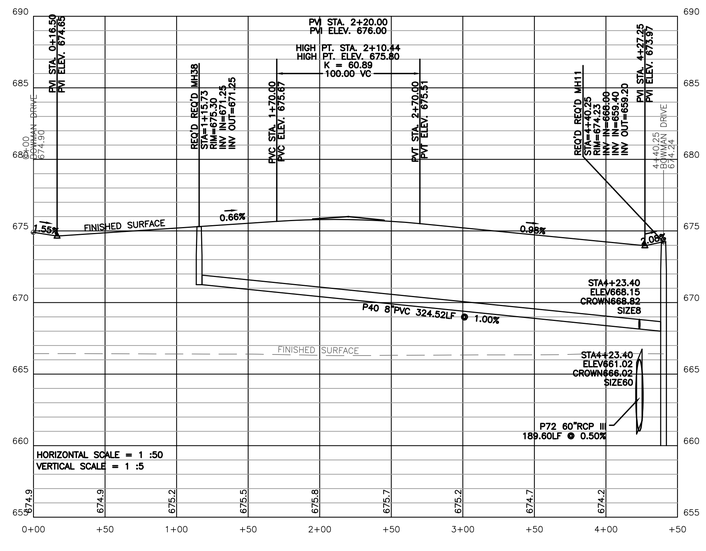

BODDING AVENUE
STA: 0+00 – 4+40.25

PUGH WRIGHT MCANALLY INC.
CIVIL ENGINEERS
310 8th AVENUE NE -- PO BOX 2419 -- DECATUR, AL -- (256) 353-3937
Pugh Wright McAnally, Inc.
www.pughwrightmcanally.com

REVISIONS

Rev#	Description	Date
5		
4		
3		
2		
1		

DR HORTON
DAVIS PRESERVE - PHASE 2
LIMESTONE COUNTY
SECTION 11, TOWNSHIP 3 SOUTH, RANGE 3 WEST
LIMESTONE COUNTY, ALABAMA

PLAN AND PROFILES

Date: 04/12/2024
Drawn By: GGL
Approved By: NLT
Scale: HOR. 1":50'
VERT 1":5'

Sign/Seal
ALABAMA
NO. 30456
PROFESSIONAL
ENGINEER
04/12/2024
NATHAN L. TOMBERLIN

Job Number:
537-24

Sheet Number:
C5.4

BENDLE LANE
STA: 0+00 – 13+00

PUGH WRIGHT MCANALLY INC.
CIVIL ENGINEERS
310 8th AVENUE NE -- PO BOX 2419 -- DECATUR, AL -- (256) 353-3937
Pugh Wright McAnally, Inc. www.pughwrightmcanally.com

REVISIONS

Rev#	Description	Date
1	--	--
2	--	--
3	--	--
4	--	--
5	--	--

DR HORTON
DAVIS PRESERVE - PHASE 2
LIMESTONE COUNTY
SECTION 11, TOWNSHIP 3 SOUTH, RANGE 3 WEST
LIMESTONE COUNTY, ALABAMA

BENDLE LANE PLAN AND PROFILE

Date: 04/12/2024
Drawn By: GGL
Approved By: NLT
Scale: HOR. 1":50'
VERT 1":5'

Sign/Seal
ALABAMA
LICENSED
NO. 30456
PROFESSIONAL
04/12/2024
ENGINEER
NATHAN L. TOMBERLIN

Job Number:
537-24

Sheet Number:
C5.5

BENDLE LANE
STA: 13+00 – 20+97.35

PUGH WRIGHT MCANALLY INC.
CIVIL ENGINEERS
310 8th AVENUE NE -- PO BOX 2419 -- DECATUR, AL -- (256) 353-3937
Pugh Wright McAnally, Inc. www.pughwrightmcanally.com

REVISIONS

Rev#	Description	Date
5		
4		
3		
2		
1		

DR HORTON
DAVIS PRESERVE - PHASE 2
LIMESTONE COUNTY
SECTION 11, TOWNSHIP 3 SOUTH, RANGE 3 WEST
LIMESTONE COUNTY, ALABAMA

BENDLE LANE PLAN AND PROFILE

Date: 04/12/2024
Drawn By: GGL
Approved By: NLT
Scale: HOR. 1":50'
VERT 1":5'

Sign/Seal
ALABAMA
LICENSED
NO. 30456
PROFESSIONAL
04/12/2024
ENGINEER
NATHAN L. TOMBERLIN

Job Number:
537-24

Sheet Number:
C5.6

LCWSA WATER NOTES:

1. CONTRACTOR MUST VERIFY THE LOCATION OF EXISTING UTILITIES PRIOR TO BEGINNING CONSTRUCTION.
2. ALL WATER INSTALLATIONS AND MATERIALS ARE TO BE IN ACCORDANCE WITH THE LATEST APPROVED LIMESTONE COUNTY WATER AND SEWER AUTHORITY (LCWSA) STANDARD SPECIFICATION AND DESIGN CRITERIA.
3. ALL CONSTRUCTION MATERIALS MUST BE SUBMITTED TO LCWSA FOR APPROVAL PRIOR TO ORDERING.
4. WATER MAINS SHALL HAVE A 5.00 FT HORIZONTAL AND 2.00 FT VERTICAL CLEARANCE FROM SANITARY SEWERS AND SHALL HAVE A 3.00 FT HORIZONTAL AND 1.00 FT VERTICAL CLEARANCE FROM OTHER UNDERGROUND STRUCTURES. SEPARATION BETWEEN SANITARY SEWER AND PRIMARY ELECTRICAL LINES SHALL BE A MINIMUM OF 10.00 FT (EDGE TO EDGE). SEWER PIPES SHALL PASS BENEATH WATER LINES.
5. TOP OF METER BOXES ARE TO BE SET 2-3 INCHES ABOVE LOT SUBGRADE.
6. SERVICES CROSSING A ROADWAY ARE TO BE ENCASED IN 2-INCH SCH 40 PVC CASING. SERVICES AND CASING SHALL EXTEND TO A POINT 2.00 FT BEHIND THE SIDEWALK ON EACH SIDE OF THE ROADWAY.
7. THE WATER LINES ARE TO BE LOCATED A MINIMUM 4.00 FT FROM BACK OF CURB AND/OR SIDEWALK.
8. ALL VALVES ARE TO BE LOCATED OUTSIDE PAVED AREAS.
9. ALL WATER MAIN MUST MAINTAIN A MINIMUM COVER OF 3.00 FT AT ALL TIMES.
10. ALL VALVE BOXES, HYDRANTS, AND RELATED APPURTENANCES SHALL BE ADJUSTED TO MATCH FINAL GRADE.
11. ALL WATER MAINS AND RELATED APPURTENANCES SHALL BE INSTALLED INSIDE A DEDICATED EASEMENT AND OR RIGHT-OF-WAY BOUNDARY.
12. NO SERVICE TEES SHALL BE INSTALLED BACK TO BACK. TEES INSTALLED CONSECUTIVELY MUST BE SEPARATED BY AT LEAST 6.00 FT OF MAIN LINE PIPE.
13. NO SERVICE TEES SHALL BE INSTALLED WITHIN 6.00 FT OF A MANHOLE.
14. CONTRACTOR TO INSTALL FITTINGS ON WATER LINE AS NEEDED IN ORDER TO TRANSITION AROUND CORNERS. RESTRAINED JOINTS ARE REQUIRED AT FITTING. MAXIMUM 45-DEGREE BENDS USED FOR TRANSITIONS.
15. OMIT
16. ALL WATER LINES IN DEVELOPMENT SHALL BE 8-INCH CLASS 350 DUCTILE IRON PIPE. IN CUL-DE-SACS WITH LESS THAN 500 FT OF PIPE, 6-INCH CLASS 350 DUCTILE IRON PIPE MAY BE USED.
17. MAXIMUM DEFLECTION OF WATER MAIN AROUND A CUL-DE-SAC IS 5 DEGREES PER 20 FT OF PIPE.
18. ALL DUCTILE IRON PIPES SHALL BE WITH PUSH ON JOINTS CONFORMING TO ASTM A746, CLASS 350.
19. ALL DUCTILE IRON PIPES SHALL BE LINED WITH ENAMELINE OR A THIN CEMENT LINING AS SPECIFIED IN ANSI A21.4/AWWA C104 AND INCLUDE A BITUMINOUS SEAL COAT OR ASPHALT EMULSION SPRAY COAT 1 MIL THICK IN ACCORDANCE WITH LCWSA SPECIFICATION.
20. AN LCWSA REPRESENTATIVE MUST ALWAYS BE ON SITE WHEN TYING INTO AN EXISTING WATER MAIN.
21. ALL PIPING SHALL BE PRESSURE TESTED AND DISINFECTED IN ACCORDANCE WITH LCWSA STANDARD SPECIFICATIONS AND DESIGN CRITERIA.
22. ALL WATER LINES (DIP OR PVC), INCLUDING SERVICE LINES, SHALL BE INSTALLED WITH A 10 GAUGE, BLUE COATED COPPER WIRE, INSTALLED DIRECTLY ABOVE THE PIPE. ADEQUATE WIRE SHALL BE TERMINATED INSIDE VALVE BOXES FOR CONNECTION TO LINE DETECTION EQUIPMENT.

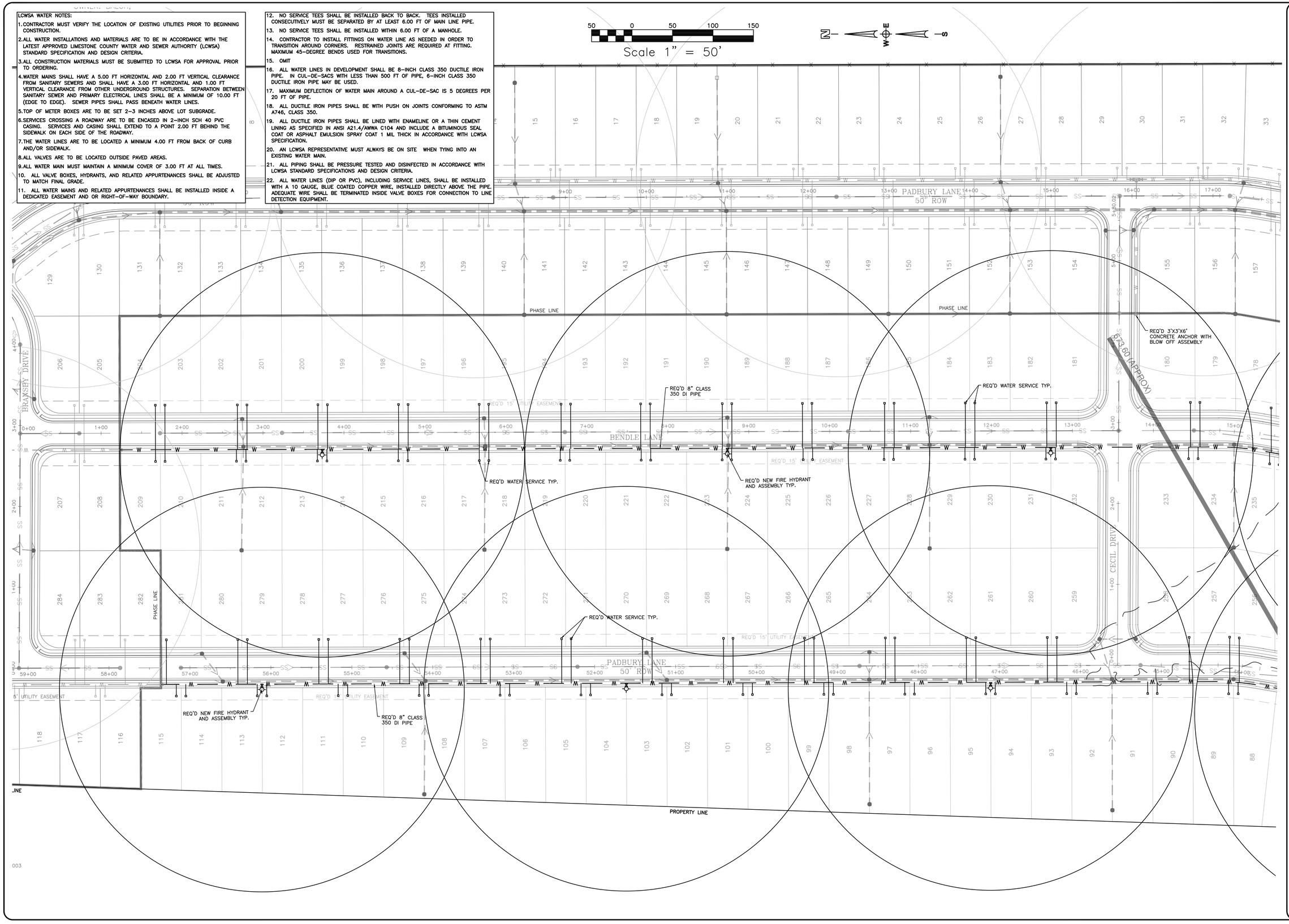

PUGH WRIGHT MCNALLY INC.
CIVIL ENGINEERS
310 8th AVENUE NE -- PO BOX 2419 -- DECATUR, AL -- (256) 353-3937
Pugh Wright McNally, Inc. www.pughwrightmcnally.com

REVISIONS

Rev#	Description	Date
5		
4		
3		
2		
1		

DR HORTON
DAVIS PRESERVE - PHASE 2
LIMESTONE COUNTY
SECTION 11, TOWNSHIP 3 SOUTH, RANGE 3 WEST
LIMESTONE COUNTY, ALABAMA

WATER DISTRIBUTION PLAN

Date: 04/12/2024
Drawn By: GGL
Approved By: NLT
Scale: 1":50'

Sign/Seal
ALABAMA LICENSED NO. 30456 PROFESSIONAL ENGINEER 04/12/2024 NATHAN L. TOMBERLIN

Job Number:
537-24

Sheet Number:
C6.0

LCWSA WATER NOTES:

1. CONTRACTOR MUST VERIFY THE LOCATION OF EXISTING UTILITIES PRIOR TO BEGINNING CONSTRUCTION.
2. ALL WATER INSTALLATIONS AND MATERIALS ARE TO BE IN ACCORDANCE WITH THE LATEST APPROVED LIMESTONE COUNTY WATER AND SEWER AUTHORITY (LCWSA) STANDARD SPECIFICATION AND DESIGN CRITERIA.
3. ALL CONSTRUCTION MATERIALS MUST BE SUBMITTED TO LCWSA FOR APPROVAL PRIOR TO ORDERING.
4. WATER MAINS SHALL HAVE A 5.00 FT HORIZONTAL AND 2.00 FT VERTICAL CLEARANCE FROM SANITARY SEWERS AND SHALL HAVE A 3.00 FT HORIZONTAL AND 1.00 FT VERTICAL CLEARANCE FROM OTHER UNDERGROUND STRUCTURES. SEPARATION BETWEEN SANITARY SEWER AND PRIMARY ELECTRICAL LINES SHALL BE A MINIMUM OF 10.00 FT (EDGE TO EDGE). SEWER PIPES SHALL PASS BENEATH WATER LINES.
5. TOP OF METER BOXES ARE TO BE SET 2–3 INCHES ABOVE LOT SUBGRADE.
6. SERVICES CROSSING A ROADWAY ARE TO BE ENCASED IN 2–INCH SCH 40 PVC CASING. SERVICES AND CASING SHALL EXTEND TO A POINT 2.00 FT BEHIND THE SIDEWALK ON EACH SIDE OF THE ROADWAY.
7. THE WATER LINES ARE TO BE LOCATED A MINIMUM 4.00 FT FROM BACK OF CURB AND/OR SIDEWALK.
8. ALL VALVES ARE TO BE LOCATED OUTSIDE PAVED AREAS.
9. ALL WATER MAIN MUST MAINTAIN A MINIMUM COVER OF 3.00 FT AT ALL TIMES.
10. ALL VALVE BOXES, HYDRANTS, AND RELATED APPURTENANCES SHALL BE ADJUSTED TO MATCH FINAL GRADE.
11. ALL WATER MAINS AND RELATED APPURTENANCES SHALL BE INSTALLED INSIDE A DEDICATED EASEMENT AND OR RIGHT–OF–WAY BOUNDARY.
12. NO SERVICE TEES SHALL BE INSTALLED BACK TO BACK. TEES INSTALLED CONSECUTIVELY MUST BE SEPARATED BY AT LEAST 6.00 FT OF MAIN LINE PIPE.
13. NO SERVICE TEES SHALL BE INSTALLED WITHIN 6.00 FT OF A MANHOLE.
14. CONTRACTOR TO INSTALL FITTINGS ON WATER LINE AS NEEDED IN ORDER TO TRANSITION AROUND CORNERS. RESTRAINED JOINTS ARE REQUIRED AT FITTING. MAXIMUM 45–DEGREE BENDS USED FOR TRANSITIONS.
15. OMIT
16. ALL WATER LINES IN DEVELOPMENT SHALL BE 8–INCH CLASS 350 DUCTILE IRON PIPE. IN CUL–DE–SACS WITH LESS THAN 500 FT OF PIPE, 6–INCH CLASS 350 DUCTILE IRON PIPE MAY BE USED.
17. MAXIMUM DEFLECTION OF WATER MAIN AROUND A CUL–DE–SAC IS 5 DEGREES PER 20 FT OF PIPE.
18. ALL DUCTILE IRON PIPES SHALL BE WITH PUSH ON JOINTS CONFORMING TO ASTM A746, CLASS 350.
19. ALL DUCTILE IRON PIPES SHALL BE LINED WITH ENAMELINE OR A THIN CEMENT LINING AS SPECIFIED IN ANSI A21.4/AWWA C104 AND INCLUDE A BITUMINOUS SEAL COAT OR ASPHALT EMULSION SPRAY COAT 1 MIL THICK IN ACCORDANCE WITH LCWSA SPECIFICATION.
20. AN LCWSA REPRESENTATIVE MUST ALWAYS BE ON SITE WHEN TYING INTO AN EXISTING WATER MAIN.
21. ALL PIPING SHALL BE PRESSURE TESTED AND DISINFECTED IN ACCORDANCE WITH LCWSA STANDARD SPECIFICATIONS AND DESIGN CRITERIA.
22. ALL WATER LINES (DIP OR PVC), INCLUDING SERVICE LINES, SHALL BE INSTALLED WITH A 10 GAUGE, BLUE COATED COPPER WIRE, INSTALLED DIRECTLY ABOVE THE PIPE. ADEQUATE WIRE SHALL BE TERMINATED INSIDE VALVE BOXES FOR CONNECTION TO LINE DETECTION EQUIPMENT.

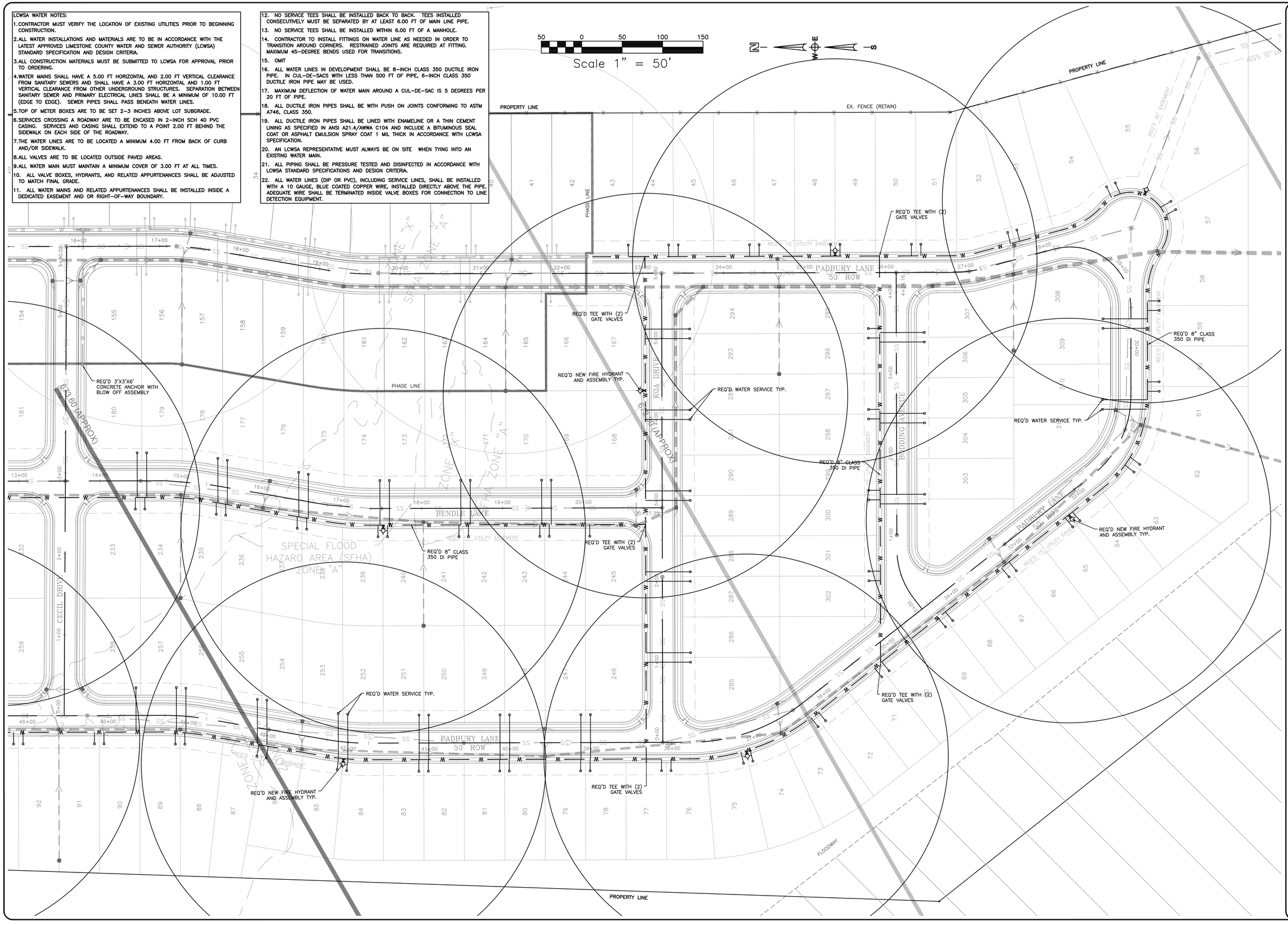

PUGH WRIGHT MCANALLY INC.
CIVIL ENGINEERS
310 8th AVENUE NE – PO BOX 2419 – DECATUR, AL – (256) 353-3937
Pugh Wright McAnally, Inc.
www.pughwrightmcanally.com

REVISIONS

Rev#	Description	Date
5		
4		
3		
2		
1		

DR HORTON
DAVIS PRESERVE - PHASE 2
LIMESTONE COUNTY
SECTION 11, TOWNSHIP 3 SOUTH, RANGE 3 WEST
LIMESTONE COUNTY, ALABAMA

WATER DISTRIBUTION PLAN

Date: 04/12/2024
Drawn By: GGL
Approved By: NLT
Scale: 1":50'

Sign/Seal
ALABAMA
LICENSED
NO. 30456
PROFESSIONAL
04/12/2024
ENGINEER
NATHAN L. TOMBERLIN

Job Number:
537–24

Sheet Number:
C6.1

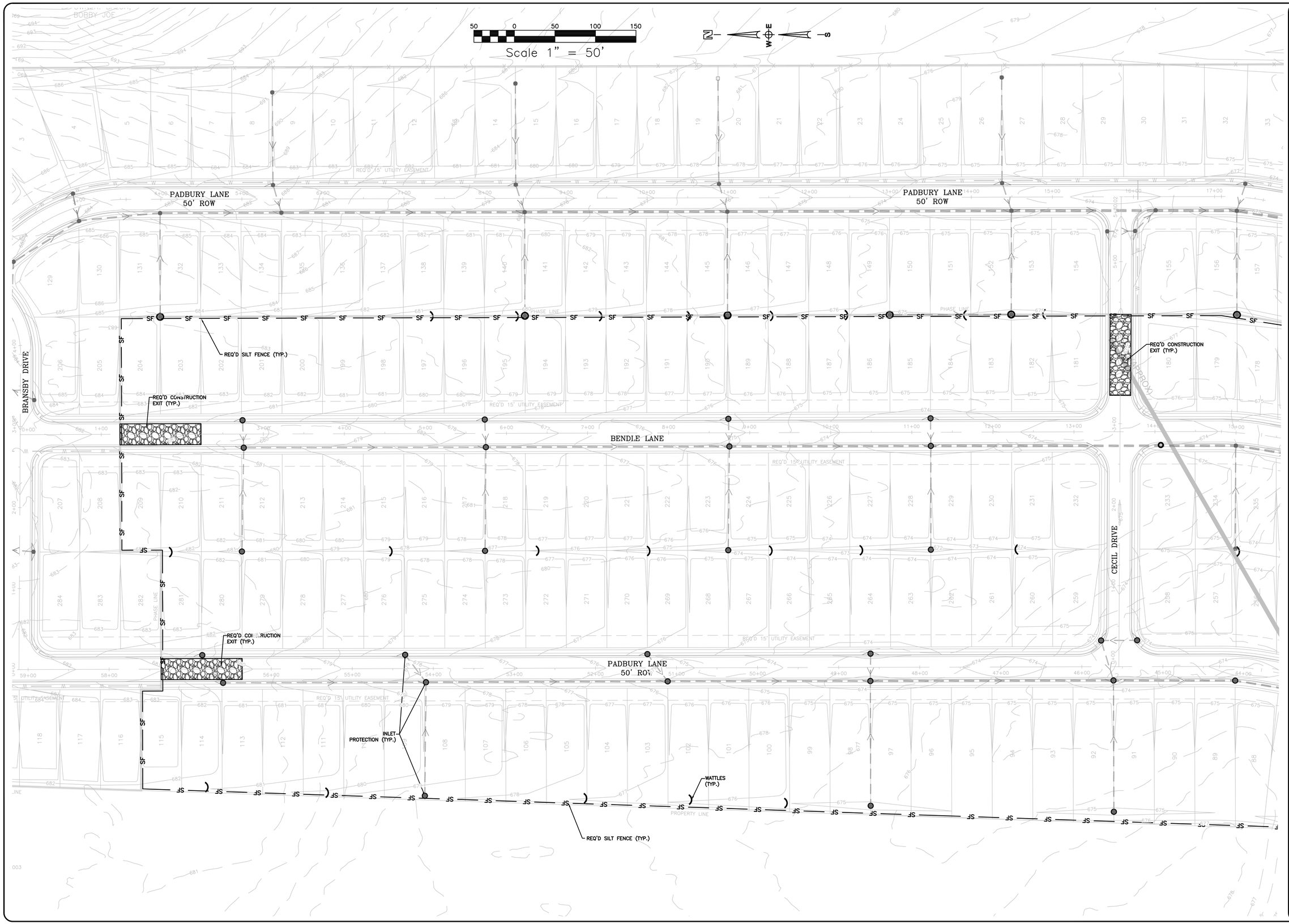

PUGH WRIGHT MCANALLY INC.
CIVIL ENGINEERS
310 8th AVENUE NE -- PO BOX 2419 -- DECATUR, AL -- (256) 353-3937
Pugh Wright McAnally, Inc. www.pughwrightmcanally.com

REVISIONS

Rev#	Description	Date
5	..	..
4	..	..
3	..	..
2	..	..
1	..	..

DR HORTON
DAVIS PRESERVE - PHASE 2
LIMESTONE COUNTY
SECTION 11, TOWNSHIP 3 SOUTH, RANGE 3 WEST
LIMESTONE COUNTY, ALABAMA

EROSION CONTROL PLAN

Date: 04/12/2024
Drawn By: GGL
Approved By: NLT
Scale: 1":50'

Sign/Seal
ALABAMA LICENSED NO. 30456 PROFESSIONAL ENGINEER 04/12/2024 NATHAN L. TOMBERLIN

Job Number:
537-24

Sheet Number:
C7.0

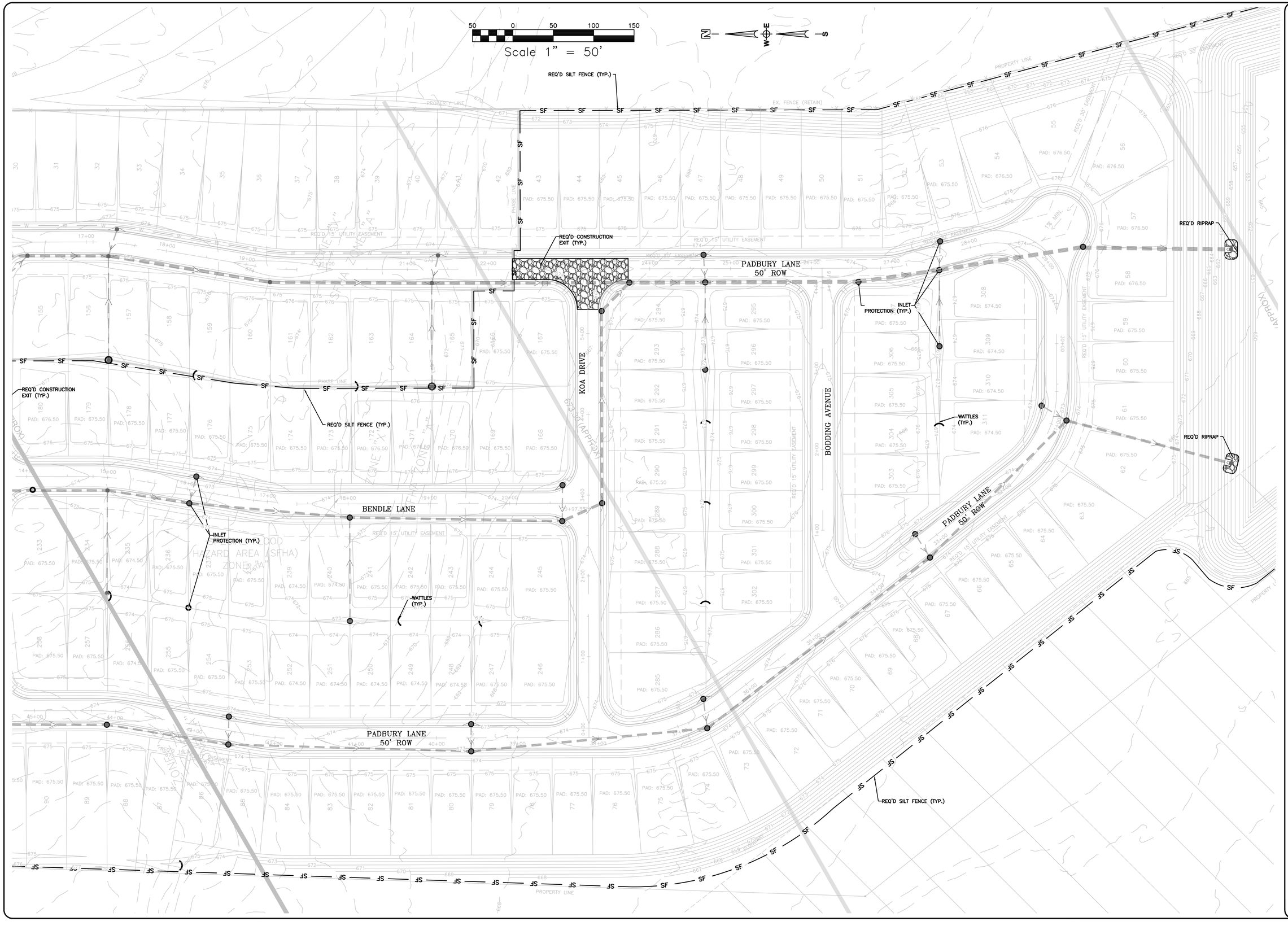

PUGH WRIGHT MCANALLY INC.
CIVIL ENGINEERS
310 8th AVENUE NE -- PO BOX 2419 -- DECATUR, AL -- (256) 353-3937
Pugh Wright McAnally, Inc. www.pughwrightmcanally.com

REVISIONS

Rev#	Description	Date
5		
4		
3		
2		
1		

DR HORTON
DAVIS PRESERVE - PHASE 2
LIMESTONE COUNTY
SECTION 11, TOWNSHIP 3 SOUTH, RANGE 3 WEST
LIMESTONE COUNTY, ALABAMA

EROSION CONTROL PLAN

Date: 04/12/2024
Drawn By: GGL
Approved By: NLT
Scale: 1":50'

Sign/Seal
ALABAMA LICENSED NO. 30456 PROFESSIONAL ENGINEER 04/12/2024 NATHAN L. TOMBERLIN

Job Number:
537-24

Sheet Number:
C7.1

EROSION CONTROL PLAN (ECP) NOTES

1. THIS ECP PLAN IS INTENDED FOR THE PURPOSE OF PREVENTING SOIL FROM LEAVING THE SITE. THIS PLAN IS A MINIMUM THAT MUST BE IN PLACE BEFORE ANY CONSTRUCTION BEGINS.
2. FULL IMPLEMENTATION AND CONTINUED MAINTENANCE OF EFFECTIVE STRUCTURAL AND NON-STRUCTURAL COMPONENTS ARE REQUIRED TO BE DONE ON A WEEKLY BASIS BY THE CONTRACTOR. CONTRACTOR SHALL PROVIDE A RAIN GAGE ON SITE AND SHALL RECORD DAILY RAINFALL TOTALS.
3. ALABAMA DEPARTMENT OF ENVIRONMENTAL MANAGEMENT (ADEM) MAY DIRECT THE CONTRACTOR AT ANY TIME TO ADD OR TAKE AWAY FROM THIS DESIGNED ECP. THIS SHALL BE DONE AT NO ADDITIONAL COST TO THE OWNER.
4. ANY CONSTRUCTION IN PROXIMITY OF ANY STATE WATERS, (STREAMS, CREEKS, RIVERS OR LAKES) REQUIRE PRECONSTRUCTION WATER SAMPLES TO ENSURE TURBIDITY OF THOSE WATERS DURING CONSTRUCTION ARE NOT ELEVATED MORE THAN A 50 NTU CHANGE ABOVE BACKGROUND (UPSTREAN TO DOWNSTREAM) OR CANNOT CAUSE A TURBIDITY CHANGE WHICH RESULTS IN "SUBSTANTIAL VISIBLE CONTRAST" WITH BACKGROUND CONDITIONS, OR CANNOT IMPACT BENEFICIAL USE OF STATE WATERS.
5. CONSTRUCTION IS DEFINED AS ANY LAND DISTURBANCE OR DISCHARGE OF POLLUTANTS ASSOCIATED WITH, OR THE RESULTS OF BUILDING, EXCAVATION, LAND CLEARING, GRUBBING, PLACEMENT OR FILL, GRADING, BLASTING, RECLAMATION, AREAS IN WHICH CONSTRUCTION MATERIALS ARE STORED IN ASSOCIATION WITH A LAND DISTURBANCE OR HANDLED ABOVE GROUND, AND OTHER ASSOCIATED AREAS INCLUDING, BUT NOT LIMITED TO CONSTRUCTION SITE VEHICLE PARKING, EQUIPMENT OR SUPPLY AREAS, MATERIAL STOCKPILES, TEMPORARY OFFICE AREAS AND ACCESS ROADS.
6. ANY UPSET CONDITIONS OF A NON-STRUCTURAL COMPONENT OF THE ECP SHALL BE REPAIRED WITHIN 7 CALENDAR DAYS OF VERBAL NOTIFICATION TO THE CONTRACTOR. ANY UPSET CONDITION OF A STRUCTURAL COMPONENT SHALL BE REPAIRED WITHIN 15 CALENDAR DAYS OF VERBAL NOTIFICATION TO THE CONTRACTOR. ALL VERBAL NOTIFICATIONS WILL BE PROVIDED IN WRITING WITHIN 5 BUSINESS DAYS TO THE CONTRACTOR.
7. AT ANY POINT DURING CONSTRUCTION OF THIS PROJECT STOCKPILES, BORROW AREAS, CUT SLOPES OR FILL AREAS ARE NOT ACTIVE FOR 13 DAYS, THESE AREAS SHALL BE SEEDED OR COVERED BY THE CONTRACTOR TO ENSURE NO EROSION OF THESE AREAS OCCUR.
8. ANY NONCOMPLIANCE WITH ADEM, QCP (QUALIFIED CREDENTIALED PROFESSIONAL), QCI (QUALIFIED CREDENTIALED INSPECTOR), OR ANY OTHER STATE, FEDERAL, COUNTY OR CITY MUNICIPALITIES MAY CAUSE A STOP WORK SITUATION.
9. ANY COST RESULTING FROM FINES OR ACTIONS NECESSITATED BY NOTICES OF VIOLATION OF THE NPDES PERMIT SHALL BE THE RESPONSIBILITY OF THE CONTRACTOR.

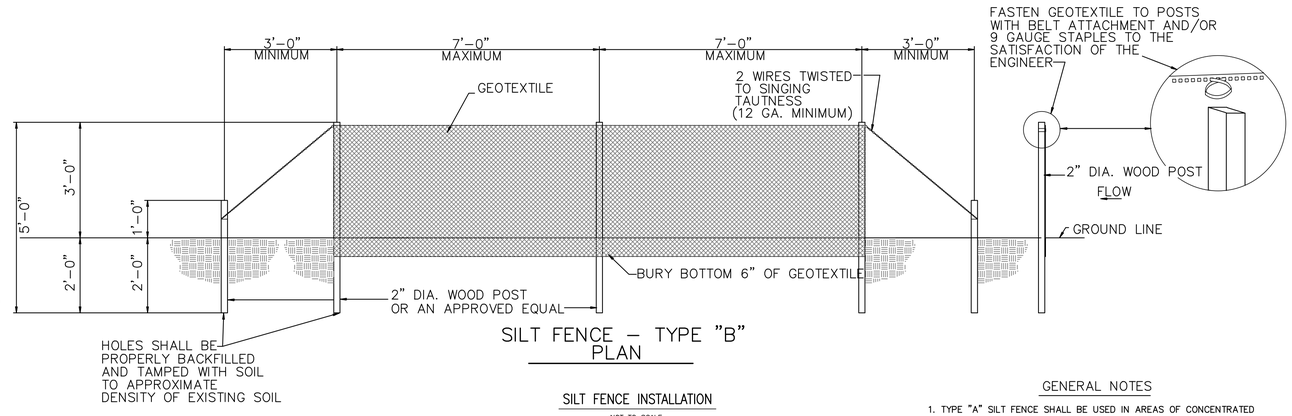

SILT FENCE – TYPE "B" PLAN

SILT FENCE INSTALLATION

NOT TO SCALE

GENERAL NOTES

1. TYPE "A" SILT FENCE SHALL BE USED IN AREAS OF CONCENTRATED FLOW. TYPE "B" SILT FENCE SHALL BE USED IN AREAS WHERE FLOW IS NOT AS SEVERE OR AS DIRECTED BY THE ENGINEER.
2. SILT FENCES ARE TEMPORARY EROSION CONTROL ITEMS, THAT SHALL BE ERECTED OPPOSITE ERODABLE AREAS SUCH AS NEWLY GRADED FILL SLOPES AND ADJACENT TO STREAMS AND CHANNELS.
3. SILT FENCE SHOULD BE PLACES WELL INSIDE RIGHT-OF-WAY AND ALONG EDGE OF CLEARING LIMITS, THIS WILL ALLOW ROOM FOR A BACK-UP FENCE IF FIRST BECOMES FULL. SILT FENCES SHALL BE INPLACE PRIOR TO ANY CONSTRUCTION OPERATION.
4. WHEREVER POSSIBLE SILT FENCES SHALL BE CONSTRUCTED ACROSS A FLAT AREA IN THE SHAPE OF A HORSESHOE. THIS AIDS IN PONDING OF RUNOFF AND FACILITATES SEDIMENTATION.
5. AFTER THE CONSTRUCTION AREA IS STABILIZED AND EROSION ACTIVITY CURTAILED, SILT FENCES SHALL BE REMOVED.
6. RING FASTENERS USED TO SECURE GEOTEXTILES TO WOVEN WIRE SHALL BE 13 GA. (AMERICAN).
7. IF WOOD POST ARE USED, STAPLES FOR SECURING WOVEN WIRE TO POSTS SHALL BE (9) GAUGE, GALVINIZED, 1 1/2" LONG, 5/POST @ APPROXIMATELY 1'-0" O.C.
8. WOVEN WIRE TO BE 12 1/2 GAUGE (MINIMUM).

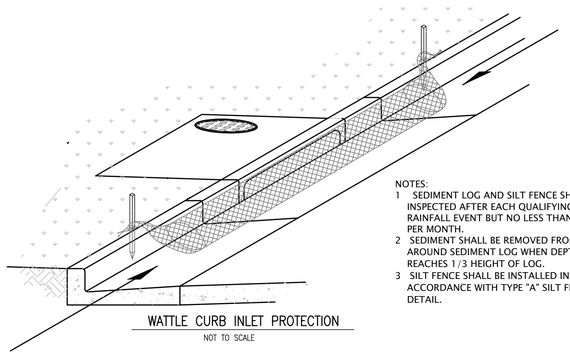

NOTES:
1 SEDIMENT LOG AND SILT FENCE SHALL BE INSPECTED AFTER EACH QUALIFYING RAINFALL EVENT BUT NO LESS THAN ONCE PER MONTH.
2 SEDIMENT SHALL BE REMOVED FROM AROUND SEDIMENT LOG WHEN DEPTH REACHES 1/3 HEIGHT OF LOG.
3 SILT FENCE SHALL BE INSTALLED IN ACCORDANCE WITH TYPE "A" SILT FENCE DETAIL.

WATTLE CURB INLET PROTECTION

NOT TO SCALE

CONCRETE WASHOUT NOTES:

1. LOCATE TEMPORARY WASHOUT MINIMUM OF 50 FT FROM STORM DRAIN INLET, OPEN DRAINAGE FACILITIES, AND WATERCOURSES.
2. SIGN WITH "CONCRETE WASHOUT" IN MINIMUM 6" HIGH LETTER SHALL BE VISIBLY POSTED TO INFORM CONCRETE EQUIPMENT OPERATORS TO UTILIZE PROPER FACILITIES.
3. PIT VOLUME SHALL BE SUFFICIENT TO CONTAIN ALL LIQUID AND CONCRETE WASTE GENERATED BY WASHOUT OPERATIONS WITH A MINIMUM OF 12" FREEBOARD (TYPICAL LENGTH AND WIDTH OF 10 FT)
4. ONCE CONCRETE WASTES ARE WASHED INTO THE DESIGNATED AREA AND ALLOWED TO HARDEN, THE CONCRETE SHALL BE BROKEN UP AND REMOVED FROM SITE.
5. PLASTIC LINING SHALL BE A MINIMUM OF 10MIL POLYETHYLENE SHEETING AND SHALL BE FREE OF HOLES, TEARS, OR OTHER DEFECTS THAT COMPROMISE THE IMPERMEABILITY OF THE MATERIAL. LINING SHALL BE REPAIRED OR REPLACED IF SUCH DEFECTS APPEAR.
6. WASHOUT FACILITIES MUST BE CLEANED OR NEW FACILITIES MUST BE CONSTRUCTED AND READY TO USE ONCE THE WASHOUT IS 75% FULL.

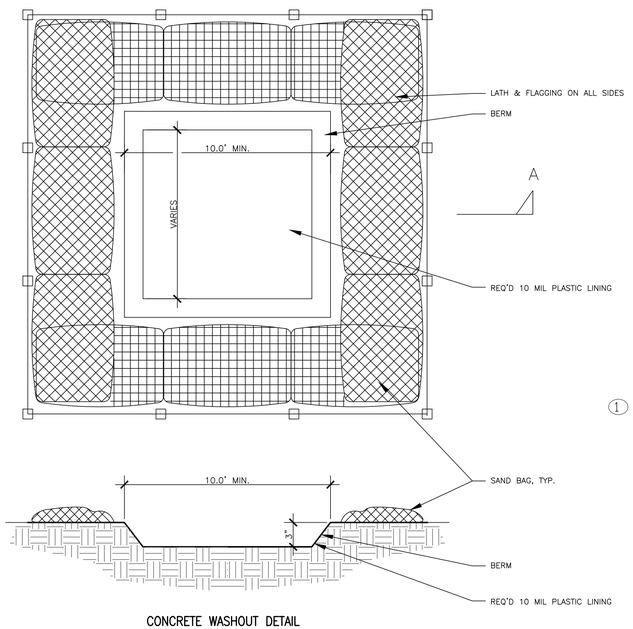

CONCRETE WASHOUT DETAIL

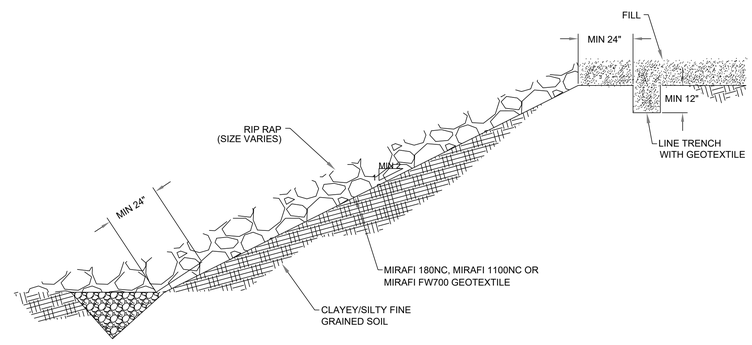

PERMANENT EROSION CONTROL - ARMOR STONE OVER FINE GRAINED SOILS

NOT TO SCALE

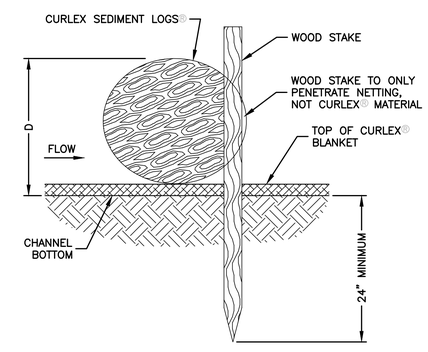

STAKE DETAILS

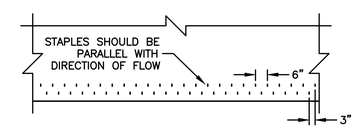

CHANNEL TERMINATION

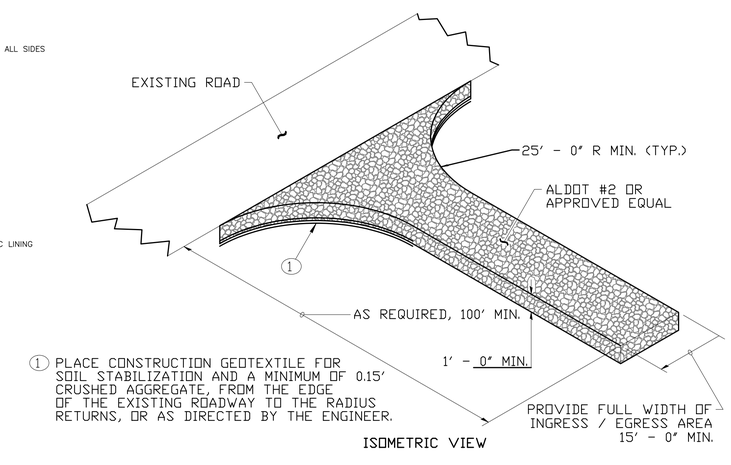

1 PLACE CONSTRUCTION GEOTEXTILE FOR SOIL STABILIZATION AND A MINIMUM OF 0.15' CRUSHED AGGREGATE, FROM THE EDGE OF THE EXISTING ROADWAY TO THE RADIUS RETURNS, OR AS DIRECTED BY THE ENGINEER.

ISOMETRIC VIEW

STABILIZED CONSTRUCTION ENTRANCE

NOT TO SCALE

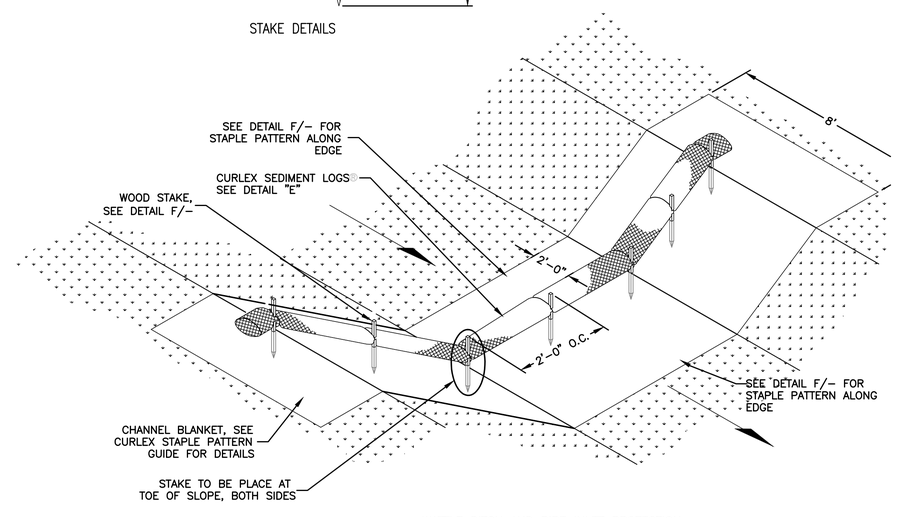

WATTLE DITCH AND PIPE INLET PROTECTION

NOT TO SCALE

PUGH WRIGHT MCANALLY INC.
CIVIL ENGINEERS
310 8th AVENUE NE - PO BOX 2419 - DECATUR, AL - (256) 353-3937
Pugh Wright McAnally, Inc. www.pughwrightmcanally.com

REVISIONS

Rev#	Description	Date
5		
4		
3		
2		
1		

DR HORTON
DAVIS PRESERVE - PHASE 2
LIMESTONE COUNTY
SECTION 11, TOWNSHIP 3 SOUTH, RANGE 3 WEST
LIMESTONE COUNTY, ALABAMA

EROSION CONTROL DETAILS

Date: 04/12/2024
Drawn By: GGL
Approved By: NLT
Scale: N.T.S.

Sign/Seal
ALABAMA LICENSED NO. 30456 PROFESSIONAL ENGINEER 04/12/2024 NATHAN L. TOMBERLIN

Job Number:
537-24

Sheet Number:
C7.2

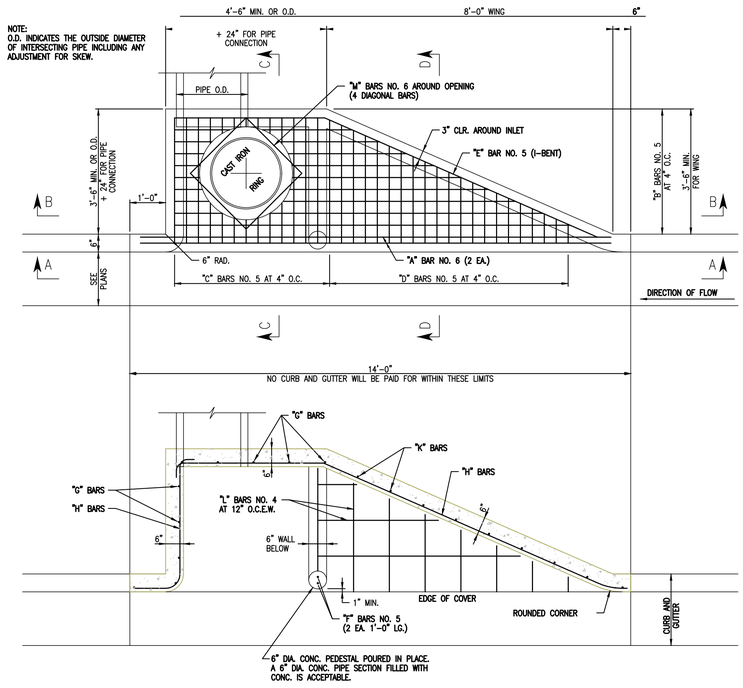

PLAN VIEW

SCALE: 1/2"=1'-0"

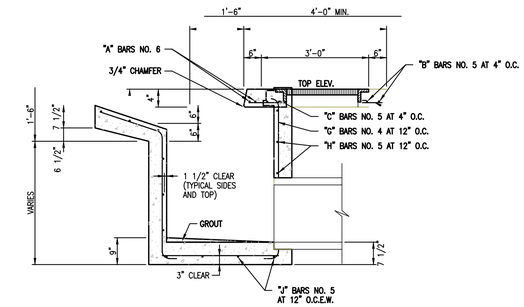

SECTION "C-C"

SCALE: 1/2" = 1'-0"

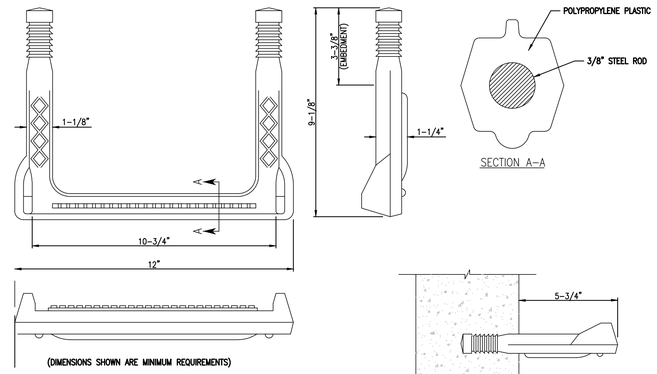

NOTE:
MANHOLE STEPS SHALL BE MANUFACTURED FROM ALUMINUM OR POLYPROPYLENE PLASTIC REINFORCED WITH A 3/8" OR LARGER STEEL ROD. STEPS SHALL BE EMBEDDED IN THE BASE, RISER AND TOP SECTIONS A MINIMUM OF THREE INCHES AT THE TIME OF CONSTRUCTION. MANHOLE STEPS SHALL BE A MINIMUM OF 10-3/4" WIDE AND EXTEND FROM THE MANHOLE A MINIMUM OF 5-3/4".

STORM SEWER MANHOLE STEP DETAIL

NOT TO SCALE

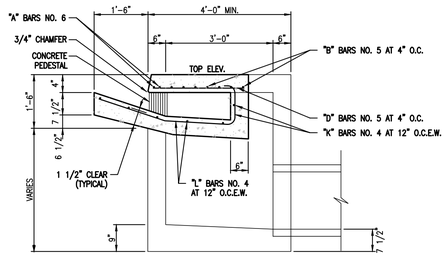

SECTION "D-D"

SCALE: 1/2" = 1'-0"

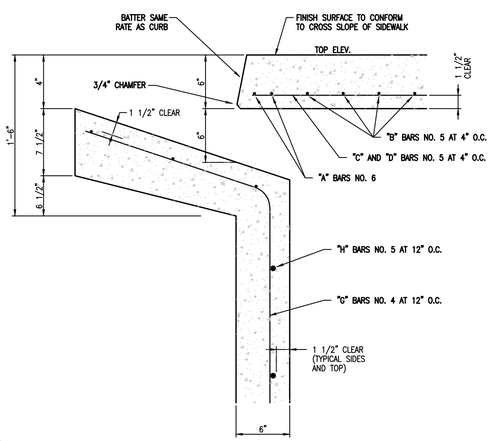

DETAIL "A"

SCALE: 1 1/2" = 1'-0"

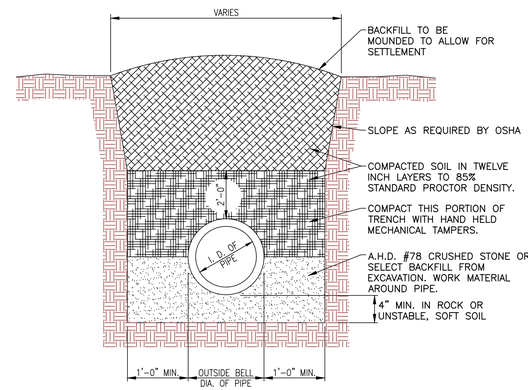

STORM SEWER BEDDING, NON-TRAFFIC

NOT TO SCALE

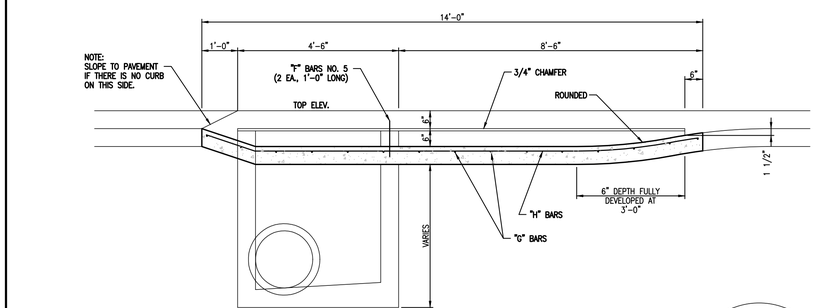

SECTION "A-A"

SCALE: 1/2" = 1'-0"

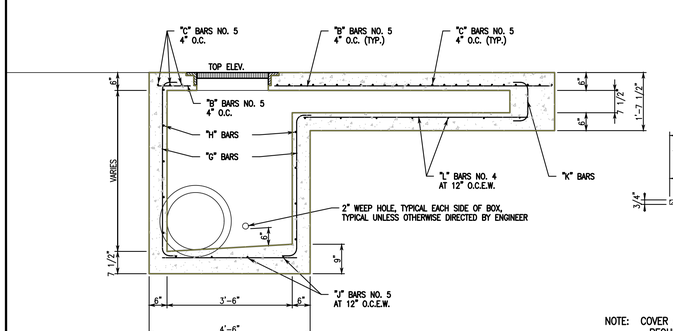

SECTION "B-B"

SCALE: 1/2" = 1'-0"

COVER DETAIL

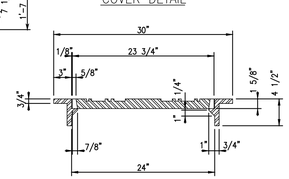

SECTION

NOTE: COVER AND FRAME SHALL CONFORM TO THE REQUIREMENTS OF CLASS 30 FOR GRAY IRON CASTING, ASTM (A 48). FRAME AND COVER SHALL BE CERTIFIED BY MFR. TO BE TRAFFIC BEARING WHEN APPLICABLE.

RING AND COVER DETAIL

NOT TO SCALE

GENERAL NOTES

CONCRETE	ALL CONCRETE SHALL BE 3,000 PSI, 28 DAY COMPRESSIVE STRENGTH.
REINFORCING	ALL REINFORCEMENT SHALL BE DEFORMED BAR, GRADE 60.
INLET WINGS	WHERE THE DIRECTION OF FLOW IS FROM BOTH SIDES OF THE INLET, SIDE WING OPENINGS (AS SHOWN ON ONE SIDE ONLY) SHALL BE BUILT ON BOTH SIDES OF INLET. FOR EACH INLET SO BUILT PAYMENT WILL BE MADE UNDER ITEM "INLETS TYPE S, (DOUBLE WING)". WHERE ONE WING ONLY IS BUILT PAYMENT WILL BE MADE UNDER ITEM "INLETS TYPE S, (SINGLE WING)".
LARGE PIPE	TO ACCOMMODATE LARGE DIAMETER PIPE, OR TO FIT OTHER CONDITIONS, IT MAY BE NECESSARY TO INCREASE ONE OR BOTH PLAN DIMENSIONS OF THE INLET BOX AND COVER SLAB. NO ADDITIONAL COMPENSATION WILL BE ALLOWED FOR THE CORRESPONDING INCREASE IN CONSTRUCTION MATERIALS WHERE CHANGES IN DIMENSIONS ARE REQUIRED.
PIPE CONNECTIONS	PIPE MAY CONNECT WITH INLETS FROM ANY DIRECTION, AND AS MANY CONNECTIONS SHALL BE MADE AS ARE NECESSARY.
WEEP HOLES	2" MINIMUM DIAMETER WEEP HOLES SHALL BE CONSTRUCTED IN INLETS AS DIRECTED BY THE ENGINEER TO FACILITATE SUB GRADE DRAINAGE.
RING AND COVER	SHALL CONFORM TO THE REQUIREMENTS OF CLASS 30 FOR GRAY IRON CASTING A.S.T.M. DESIGNATION A48.
MANHOLE STEPS	MANHOLE STEPS ARE REQUIRED WHEN DIMENSION FROM BOTTOM SLAB FLOW LINE TO TOP SLAB IS GREATER THAN 4'-0". STEPS SHALL BE INSTALLED AT 1'-4" O.C. VERTICALLY.

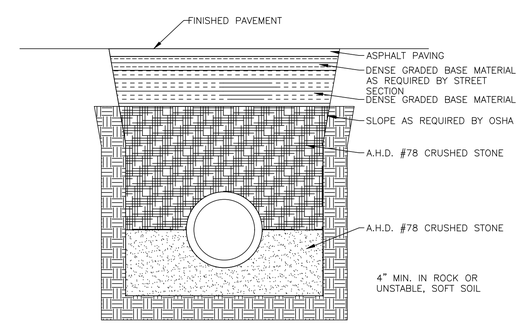

STORM SEWERS IN PROPOSED TRAFFIC AREAS OR WITHIN STREET RIGHTS-OF-WAY

NOT TO SCALE

PUGH WRIGHT MCNALLY INC.
CIVIL ENGINEERS
310 8th AVENUE NE - PO BOX 2419 - DECATUR, AL - (256) 353-3937
Pugh Wright McNally, Inc. www.pughwrightmcnally.com

REVISIONS

Rev#	Description	Date
5		
4		
3		
2		
1		

DR HORTON
DAVIS PRESERVE - PHASE 2
LIMESTONE COUNTY
SECTION 11, TOWNSHIP 3 SOUTH, RANGE 3 WEST
LIMESTONE COUNTY, ALABAMA

CONSTRUCTION DETAILS

Date: 04/12/2024
Drawn By: GGL
Approved By: NLT
Scale: N.T.S.

Sign/Seal
ALABAMA LICENSED NO. 30456 PROFESSIONAL ENGINEER 04/12/2024 NATHAN L. TOMBERLIN

Job Number:
537-24

Sheet Number:
C8.0

NOTES

1. DIMENSION "A" IS DETERMINED BY THE LARGEST DIAMETER PIPE ENTERING THE OPEN THROAT INLET.
2. STEPS ARE REQUIRED ON ALL INLETS WHEN DIMENSION FROM BOTTOM SLAB FLOW LINE TO TOP OF TOP SLAB IS GREATER THAN 4'-0".
3. ALL CONCRETE SHALL BE CLASS "A" AND SHALL DEVELOPE A MINIMUM COMPRESSIVE STRENGTH OF 3000 PSI IN 28 DAYS.
4. REINFORCING SHALL BE INTERMEDIATE GRADE DEFORMED BARS AND SHALL CONFORM TO THE REQUIREMENTS OF THE STANDARD SPECIFICATIONS FOR BILLET STEEL CONCRETE REINFORCEMENT BARS, ASTM A-15 AND DEFORMATIONS CONFORMING TO ASTM A-305.
5. PROVIDE CONCRETE APRON AT THROAT OPENINGS.

INLET DIMENSIONS

Pipe Size	A	B & F	D	E	W
12"	4'-4"	3'-0"	12"	8"	5'-4"
15"	4'-4"	3'-0"	15"	8"	5'-4"
18"	4'-4"	3'-0"	18"	8"	5'-4"
21"	4'-6"	3'-2"	21"	8"	5'-6"
24"	4'-9"	3'-5"	24"	8"	5'-9"
30"	5'-4"	4'-0"	30"	8"	6'-4"
36"	5'-10"	4'-6"	36"	8"	6'-10"

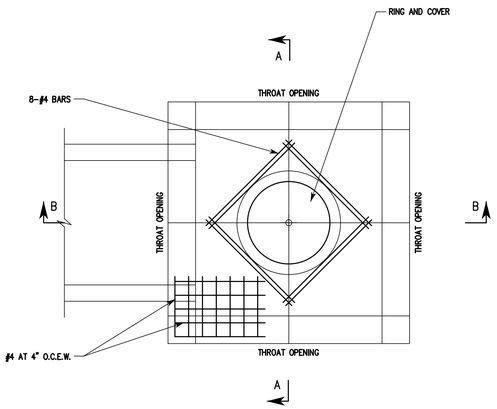

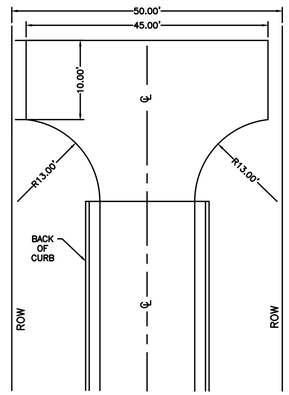

NOTE: TURNAROUND SHALL HAVE SAME PAVEMENT SECTION AS CONTIGUOUS ROADWAY.

STANDARD TURN AROUND DETAIL

NOT TO SCALE

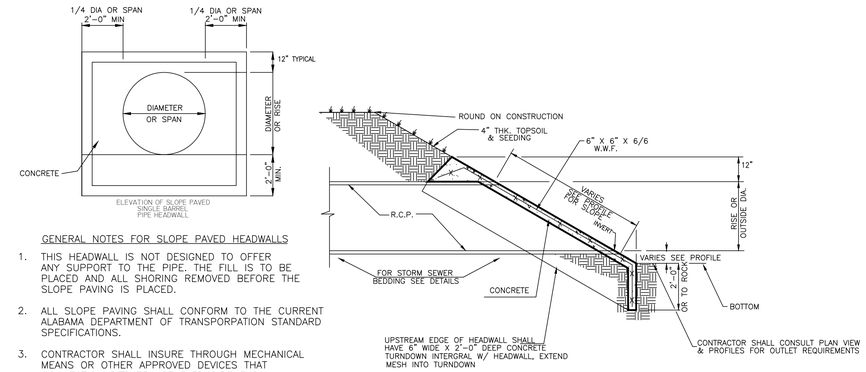

GENERAL NOTES FOR SLOPE PAVED HEADWALLS

1. THIS HEADWALL IS NOT DESIGNED TO OFFER ANY SUPPORT TO THE PIPE. THE FILL IS TO BE PLACED AND ALL SHORING REMOVED BEFORE THE SLOPE PAVING IS PLACED.
2. ALL SLOPE PAVING SHALL CONFORM TO THE CURRENT ALABAMA DEPARTMENT OF TRANSPORPATION STANDARD SPECIFICATIONS.
3. CONTRACTOR SHALL INSURE THROUGH MECHANICAL MEANS OR OTHER APPROVED DEVICES THAT CONNECTION BETWEEN BEVELED PIPE END AND CONCRETE WILL NOT BE DETACHED.
4. CONCRETE SHALL BE CLASS A WITH A MINIMUM 28 DAY COMPRESSIVE STRENGHT OF 3,000 P.S.I.

SLOPE PAVED HEADWALL DETAILS

NOT TO SCALE

NOTES

1. Dimension "A" is determined by the largest diameter pipe entering the Open Throat Inlet.
2. Steps are required on all inlets when dimension from bottom slab flow line to top of top slab is greater than 4'-0".
3. All concrete shall be class "A" and shall develope a minimum compressive strength of 3500 PSI in 28 days.
4. Reinforcing shall be intermediate grade deformed bars and shall conform to the requirements of the Standard Specifications for billet steel concrete reinforcement bars,ASTM A-15 and deformations conforming to ASTM A-305.
5. When brick construction is used, walls will be 8" brick when "H" is less than 5'-0". Use 12" brick when "H" is more than 5'-0". Float with 1/2" mortar on both sides.

INLET DIMENSIONS

Pipe Size	A	B	D	W
12"	4'-4"	3'-0"	12"	5'-4"
15"	4'-4"	3'-0"	15"	5'-4"
18"	4'-4"	3'-0"	18"	5'-4"
21"	4'-6"	3'-2"	21"	5'-6"
24"	4'-9"	3'-5"	24"	5'-9"
30"	5'-4"	4'-0"	30"	6'-4"
36"	5'-10"	4'-6"	36"	6'-10"

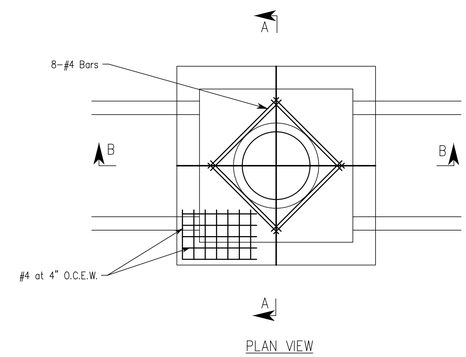

PLAN VIEW

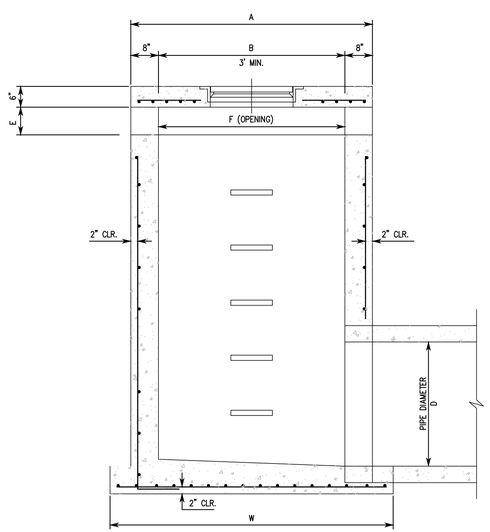

SECTION B-B

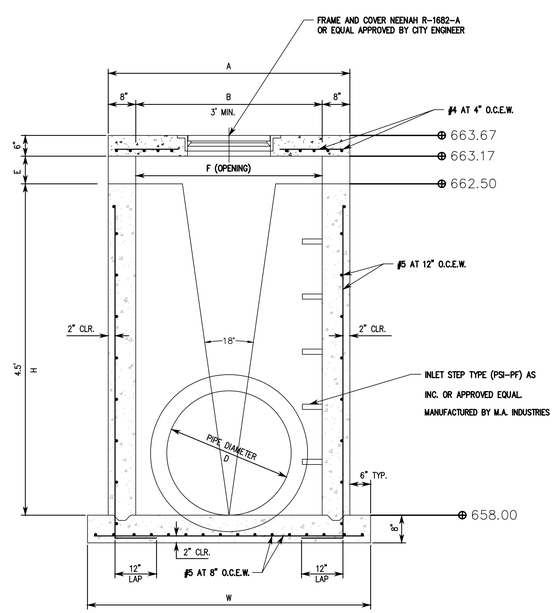

SECTION A-A

"V" STYLE CONCRETE WIER

NOT TO SCALE

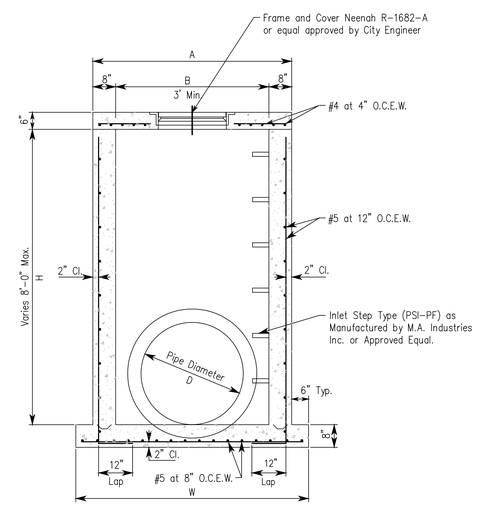

SECTION A-A

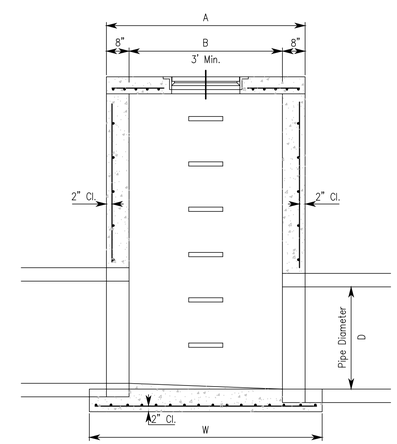

SECTION B-B

JUNCTION BOX DETAIL

NOT TO SCALE

PUGH WRIGHT MCANALLY INC.
CIVIL ENGINEERS
310 8th AVENUE NE -- PO BOX 2419 -- DECATUR, AL -- (256) 353-3937
Pugh Wright McAnally, Inc. www.pughwrightmcanally.com

REVISIONS

Rev#	Description	Date
5		
4		
3		
2		
1		

DR HORTON
DAVIS PRESERVE - PHASE 2
LIMESTONE COUNTY
SECTION 11, TOWNSHIP 3 SOUTH, RANGE 3 WEST
LIMESTONE COUNTY, ALABAMA

CONSTRUCTION DETAILS

Date: 04/12/2024
Drawn By: GGL
Approved By: NLT
Scale: N.T.S.

Sign/Seal
ALABAMA LICENSED NO. 30456 PROFESSIONAL ENGINEER 04/12/2024 NATHAN L. TOMBERLIN

Job Number:
537-24

Sheet Number:
C8.1

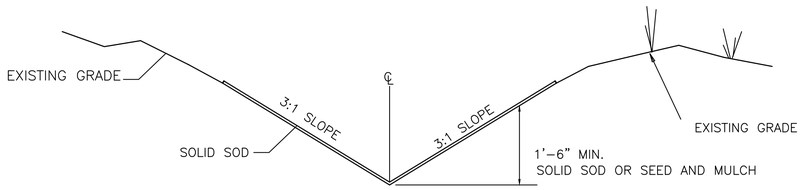

SIDE AND REAR YARD GRASS SWALE TYPICAL SECTION

NOT TO SCALE

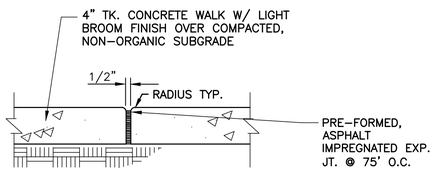

EXPANSION JOINT DETAIL FOR CONCRETE WALK

NOT TO SCALE

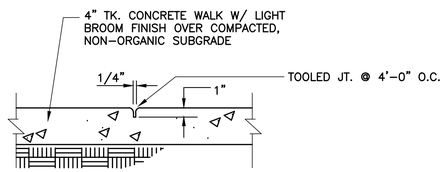

CONTROL JOINT DETAIL FOR CONCRETE WALK

NOT TO SCALE

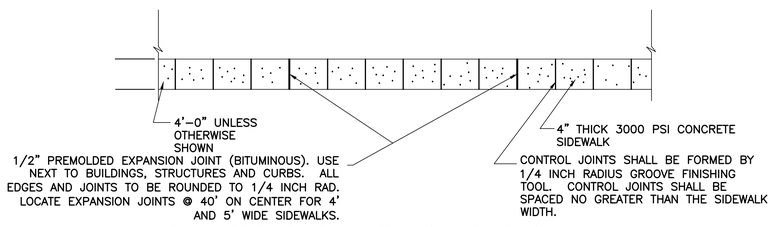

NOTE: 1. PROVIDE LIGHT BROOM FINISH INSIDE OF PICTURE FRAME AREA SHOWN ABOVE.
2. PROVIDE ¼" PER FT CROSS SLOPE

STANDARD CONCRETE SIDEWALK

NOT TO SCALE

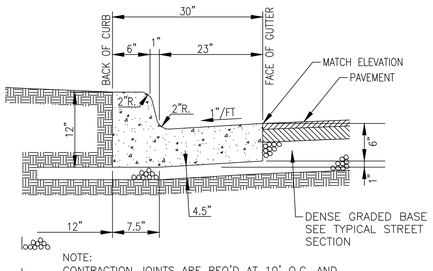

NOTE:
CONTRACTION JOINTS ARE REQ'D AT 10' O.C. AND 3/4" BITUM. EXPANSION JOINTS ARE REQ'D AT 50' O.C.

STANDARD CURB AND GUTTER

NOT TO SCALE

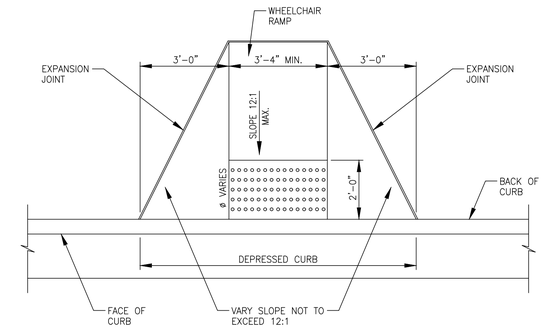

ø LENGTH OF RAMP DEPENDS UPON HEIGHT OF CURB USED

PLAN VIEW

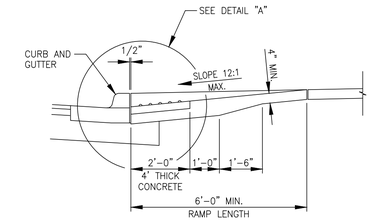

SECTION A–A
PROP. CURB AND GUTTER
(GUTTER SHOWN)

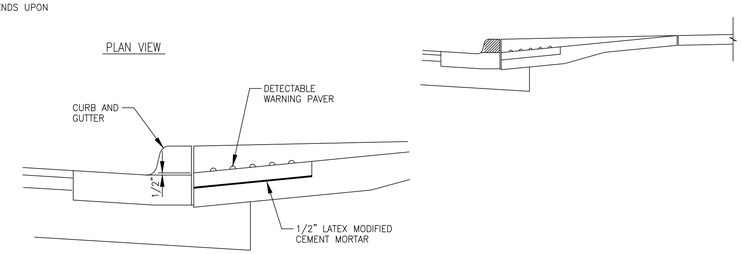

DETAIL "A"

WHEEL CHAIR RAMP DETAIL

NOT TO SCALE

NOTES: RAMP FOR THE HANDICAPPED

1. THE EXPANSION JOINT IS TO BE REPLACED WHERE THE NEW RAMP OR SIDEWALK JOINS EXISTING PAVEMENT STRUCTURE.
2. EXPANSION JOINT MATERIAL TO BE IN ACCORDANCE WITH ARTICLE 832.01 AND 832.02 OF ALABAMA DEPARTMENT OF TRANSPORTATION SPECIFICATIONS.
3. THE SUBGRADE SHALL BE FREE OF ALL ROOTS AND OTHER UNDESIRABLE MATERIALS WITH THE ROOTS CUT BACK ONE (1) FOOT FROM FACE OF SIDEWALK.
4. HANDICAP RAMPS SHALL BE CONSTRUCTED AS DETAILED HEREON.
5. PAVERS SHALL MEET ASTM C 502 CLASS 5X, TYPE I, OR C536, OR C 1272 TYPE R.
6. PAVERS WILL BE LAID ON TOP OF 4" CONCRETE BASE. SETTING BED AND JOINTS TO BE MORTARED IN ACCORDANCE WITH MANUFACTURER'S INSTRUCTIONS, OR WITH A MAXIMUM 1/2" THICK BED OF LATEX MODIFIED CEMENT MORTAR. MORTAR JOINTS TO A WIDTH OF 3/8". PAVERS SHALL NOT BE DIRECTLY TOUCHING EACH OTHER UNLESS THEY HAVE SPACING BARS.
7. MORTAR JOINTS ARE TO BE FLUSH WITH THE TOP SURFACE AND STRUCTURES AS TO GIVE A SMOOTH SURFACE. PAVERS SHALL BE LAID SUCH THAT JOINTS ARE LEVEL WITH ADJOINING JOINTS SO AS TO PROVIDE A SMOOTH TRANSITION FROM BRICK TO BRICK AND BRICK TO CONCRETE SURFACE.
8. THE SURFACE OF ANY TWO ADJACENT UNITS SHOULD NOT DIFFER BY MORE THAN 1/2" IN HEIGHT. BRICKS SHALL BE PLACED IN HERRINGBONE PATTERN WHERE FEASIBLE. IN ALL CASES, THE PATTERN OF THE DOMES IS TO BE MAINTAINED PER ADA REQUIREMENTS. FACE OF ALL BRICK SHALL BE CLEAN OF CEMENT AND PROTECTED SO AS TO AVOID CHIPPING DURING CONSTRUCTION.
9. EXPANSION JOINTS SHALL BE PROVIDED IN THE CURB RAMP AS EXTENSIONS OF WALK JOINTS FOR A NEW CONCRETE WALK. A 1/2" EXPANSION JOINT FILLER SHALL BE PROVIDED AROUND THE EDGE OF RAMPS BUILT IN EXISTING CONCRETE WALKS. LINES SHOWN ON THIS DRAWING INDICATE THE RAMP EDGE AND SLOPE CHANGES AND ARE NOT NECESSARILY JOINT LINES.

AN ACCEPTABLE MANUFACTURER AND PRODUCT IS AS NOTED BELOW:
1) ALABAMA BRICK DELIVERY, INC.
2201 24TH AVENUE NORTH
BIRMINGHAM, AL. 35234

DESIGN SPECIFICATIONS FOR DETECTABLE (TRUNCATED) WARNINGS

THE DETECTABLE WARNING IS DEFINED AS "A STANDARDIZED SURFACE FEATURE BUILT IN OR APPLIED TO THE WALKING SURFACE OR OTHER ELEMENTS TO WARN VISUALLY IMPAIRED PEOPLE OF HAZARDS ON A CIRCULATION PATH".

ALL DETECTABLE WARNINGS SHALL BE IN COMPLIANCE WITH THE AMERICANS WITH DISABILITIES ACT OF 1990 ACCESSIBILITY GUIDELINES (ADAAG) AS DETAILED IN 2B CFR PART 3G. DETECTABLE WARNINGS SHALL CONSIST OF RAISED TRUNCATED DOMES WITH A:

- BOTTOM DIAMETER OF 23 MM (0.9 IN):
- TOP DIAMETER OF 10 MM (0.4 IN):
- HEIGHT OF 5 MM (0.2 IN):
- CENTER–TO–CENTER SPACING OF 60 MM (2.36 IN):
- THE COLOR OF THE DETECTABLE WARNING SHOULD CONTRAST VISUALLY WITH ADJOINING SURFACES: EITHER LIGHT ON DARK OR DARK ON LIGHT. THE MATERIAL USED TO PROVIDE CONTRAST SHOULD CONTRAST BY AT LEAST 70 PERCENT.

DETECTABLE WARNINGS SHALL BE LAID OUT ON A TRIANGULAR GRID OR A SQUARE
GRID (PARALLEL ALIGNMENT). WHEN INSTALLED ON CURB RAMPS, ONLY THE LOWER
(10 MM 2 FT) OF THE ENTIRE CURB RAMP WIDTH SHALL BE COVERED (EXCLUDING
THE FLARED SIDES) RATHER THAN THE ENTIRE LENGTH OF THE RAMP TO MAXIMIZE
THE DETECTABILITY AND TO MINIMIZE THE NEGATIVE IMPACT ON PEOPLE WHO RELY
ON WHEELED DEVICES FOR MOBILITY. THE DETECTABLE WARNINGS SHALL BE INSTALLED
SUCH THAT THE EDGE NEAREST THE CURB LINE IS 152 MM TO 200 MM (6 IN TO 8 IN) BEHIND THE CURB LINE.

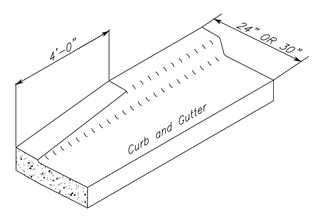

CURB TAPER DETAIL

NOT TO SCALE

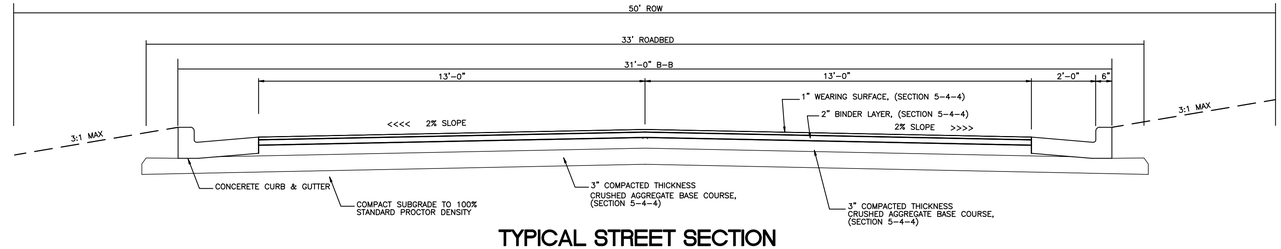

TYPICAL STREET SECTION
(31' B-B CURB AND GUTTER)

NOT TO SCALE

PUGH WRIGHT MCANALLY INC.
CIVIL ENGINEERS
310 8th AVENUE NE – PO BOX 2419 – DECATUR, AL – (256) 353-3937
Pugh Wright McAnally, Inc. www.pughwrightmcanally.com

REVISIONS

Rev#	Description	Date
5		
4		
3		
2		
1		

DR HORTON
DAVIS PRESERVE - PHASE 2
LIMESTONE COUNTY
SECTION 11, TOWNSHIP 3 SOUTH, RANGE 3 WEST
LIMESTONE COUNTY, ALABAMA

CONSTRUCTION DETAILS

Date: 04/12/2024
Drawn By: GGL
Approved By: NLT
Scale: N.T.S.

Sign/Seal
ALABAMA LICENSED NO. 30456 PROFESSIONAL ENGINEER 04/12/2024 NATHAN L. TOMBERLIN

Job Number:
537–24

Sheet Number:
C8.2

* HYDRANT BURY SHALL BE 48" MINIMUM WITH 36" COVER ABOVE WATER LINE AND BOTTOM FLANGE OF HYDRANT SET 4" ABOVE GRADE.

NOTE:
FIRE HYDRANT SHALL NOT SIT CLOSER THAN 5' FROM EDGE OF ANY POWER AND/OR LIGHT POLE.

HYDRANT SHALL BE SET ON CONCRETE VALVE BOX FOOTING BLOCK. CONCRETE BLOCK OR POURED CONCRETE (CLASS A) SHALL BE WEDGED FIRMLY BEHIND AND EXTENDING AROUND HYDRANT TO UNDISTURBED EARTH.

CARE SHALL BE USED TO SET HYDRANT PLUMB. THE FIRE HYDRANT SHALL BE LOCATED NOT LESS THAN 12 INCHES OR MORE THAN 18 INCHES FROM FACE OF CURB TO FRONT OF HYDRANT PROTECTION CASE.

A MINIMUM OF 2 CU. FT. OF CRUSHED STONE SHALL BE PLACED AROUND LEAD ADJOINING BLOCKING FOR DRAINAGE FROM WASTE OPENING.

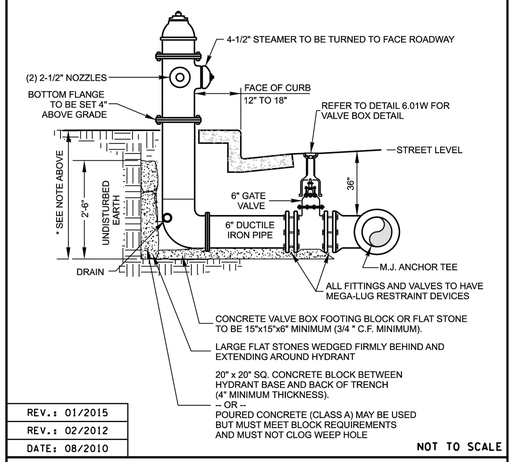

REV.: 01/2015	
REV.: 02/2012	
DATE: 08/2010	NOT TO SCALE

TYPICAL FULL SERVICE FIRE HYDRANT SETTING

STANDARD DETAILS
LIMESTONE COUNTY WATER AND SEWER AUTHORITY
LIMESTONE COUNTY, ALABAMA

6.02 W

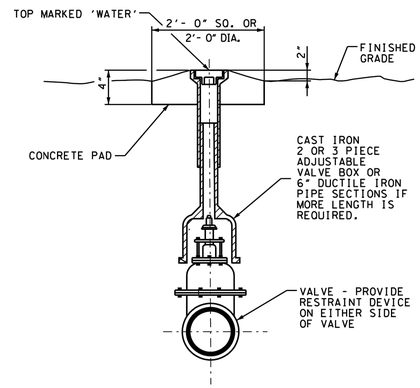

NOTE:

CAST AROUND THE TOP OF EACH VALVE BOX A CONCRETE DISK 2'-0" IN DIAMETER OR 2'-0" SQUARE AND 4" THICK WHEN VAVLES ARE LOCATED IN UNPAVED AREAS. NOT REQUIRED IN PAVED AREAS. PAD MAY BE PRECAST.

REVISED: 01/2015	
DATE: 08/2010	NOT TO SCALE

TYPICAL VALVE BOX SETTING

STANDARD DETAILS
LIMESTONE COUNTY WATER AND SEWER AUTHORITY
LIMESTONE COUNTY, ALABAMA

6.01 W

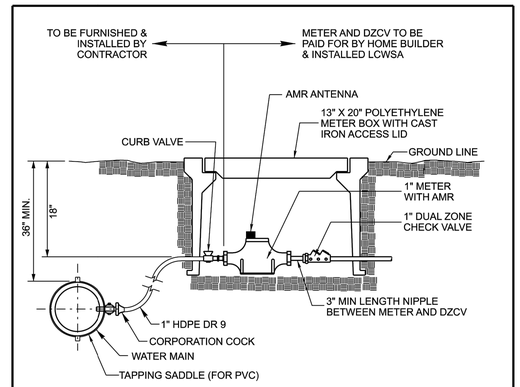

NOTES:

1. FOR TAPS IN PVC PIPE USE TAPPING SADDLE. NO SADDLE REQUIRED FOR DUCTILE IRON PIPE.
2. SERVICES UNDER ROADWAYS (NEW OR EXISTING) ARE TO BE INSTALLED INSIDE 2" SCH 40 PVC CARRIER PIPE TO A POINT 2' BEHIND SIDEWALK ON EACH SIDE OF ROADWAY. SERVICES UNDER EXISTING ROADWAYS TO BE BORED AND JACKED.
3. REFER TO STANDARD SPECIFICATIONS FOR TECHNICAL REQUIREMENTS OF EACH ITEM.
4. WATER TAPS ON NEW WATER MAINS TO BE MADE BY CONTRACTOR. WATER TAPS ON EXISTING WATER MAINS WILL BE MADE BY LCWSA.

REVISED: 01/2015	
DATE: 08/2010	NOT TO SCALE

1" SERVICE ASSEMBLY

STANDARD DETAILS
LIMESTONE COUNTY WATER AND SEWER AUTHORITY
LIMESTONE COUNTY, ALABAMA

6.05 W

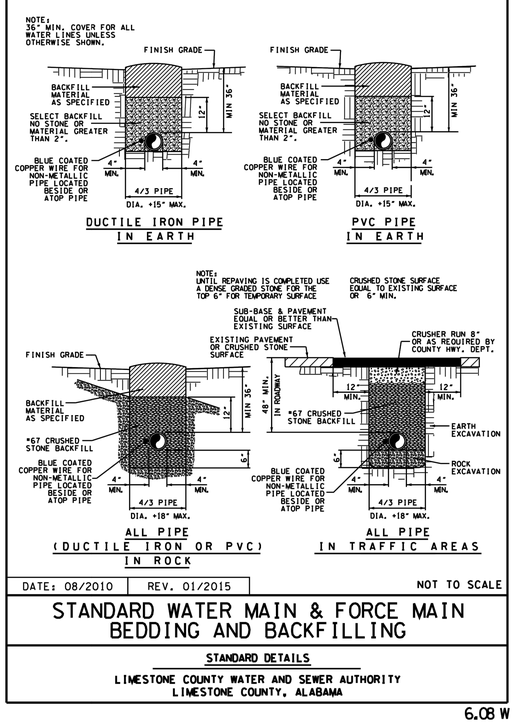

DATE: 08/2010	REV. 01/2015	NOT TO SCALE

STANDARD WATER MAIN & FORCE MAIN BEDDING AND BACKFILLING

STANDARD DETAILS
LIMESTONE COUNTY WATER AND SEWER AUTHORITY
LIMESTONE COUNTY, ALABAMA

6.08 W

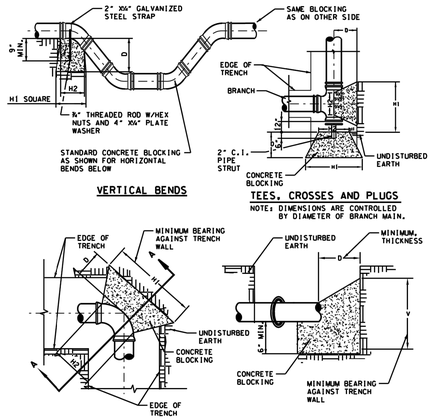

NOTES:
MEG-A-LUG RESTRAINING DEVICES MAY BE INSTALLED IF DIRECTED BY THE OWNER. IF RESTRAINING DEVICES ARE INSTALLED, CONCRETE THRUST BLOCKS ARE NOT REQUIRED. CONCRETE USED FOR BLOCKING SHALL BE 3,500 PSI. EARTH PRESSURES ARE CALCULATED FOR 4,000 PSF SOIL. BEARING AREAS OF THRUST BLOCKS SHALL BE INCREASED WHEN POURED IN SAND, LOOSE FILL OR WET EARTH. TABLE IS BASED ON 225 PSI OR 150 PSI WORKING PRESSURE PLUS 50% WATER HAMMER

TEES, CROSSES & PLUGS					90° BENDS					45° BENDS					22½° BENDS					11¼ ° BENDS					PIPE SIZE
H1	H2	V	D	C.F.	H1	H2	V	D	C.F.	H1	H2	V	D	C.F.	H1	H2	V	D	C.F.	H1	H2	V	D	C.F.	
24"	12"	12"	18"	2.28	24"	12"	12"	18"	2.28	18"	8"	12"	18"	1.66	18"	8"	12"	18"	1.66	18"	8"	12"	18"	1.66	3"&4"
24"	16"	18"	18"	3.55	30"	16"	18"	18"	4.08	24"	10"	16"	18"	3.05	24"	10"	16"	18"	3.05	24"	10"	16"	18"	3.05	6"
36"	18"	18"	18"	5.06	39"	18"	24"	18"	7.32	30"	11"	18"	18"	3.99	30"	11"	18"	18"	3.99	24"	11"	16"	18"	3.45	8"
48"	24"	18"	24"	7.18	54"	32"	24"	18"	10.25	24"	18"	21"	18"	4.66	24"	18"	21"	18"	4.66	24"	18"	21"	18"	4.66	10"
54"	30"	24"	24"	13.4	54"	32"	36"	24"	18.1	42"	18"	24"	24"	9.66	24"	18"	24"	24"	6.66	24"	18"	21"	24"	6.15	12"

DATE: 08/2010	NOT TO SCALE

TYPICAL CONCRETE THRUST BLOCKING

STANDARD DETAILS
LIMESTONE COUNTY WATER AND SEWER AUTHORITY
LIMESTONE COUNTY, ALABAMA

6.04 W

PUGH WRIGHT MCNALLY INC.
CIVIL ENGINEERS
310 8th AVENUE NE -- PO BOX 2419 -- DECATUR, AL -- (256) 353-3937
Pugh Wright McNally, Inc. www.pughwrightmcnally.com

REVISIONS

Rev#	Description	Date
5		
4		
3		
2		
1		

DR HORTON
DAVIS PRESERVE - PHASE 2
LIMESTONE COUNTY
SECTION 11, TOWNSHIP 3 SOUTH, RANGE 3 WEST
LIMESTONE COUNTY, ALABAMA

CONSTRUCTION DETAILS

Date: 04/12/2024
Drawn By: GGL
Approved By: NLT
Scale: N.T.S.

Sign/Seal
ALABAMA LICENSED NO. 30456 PROFESSIONAL ENGINEER
04/12/2024
NATHAN L. TOMBERLIN

Job Number:
537-24

Sheet Number:
C8.3

NOTES:

1. DO NOT USE GRADE RINGS WHERE MH EXTENDS ABOVE GRADE.
2. PLACE 2 STRIPS OF BUTYL RUBBER SEALANT BETWEEN TOP OF CONCRETE AND BOTTOM OF MANHOLE FRAME. GROUT FRAME AND COVER TO MANHOLE.
3. MONOLITHIC MANHOLE SIDEWALL TO BE 5" THICK
4. ALL PRECAST MANHOLE SEGMENTS TO MEET REQUIREMENTS OF ASTMC478
5. WHERE GRADE ADJUSTMENT IS DONE, A MANHOLE FRAME SEAL SHALL BE PROVIDED.

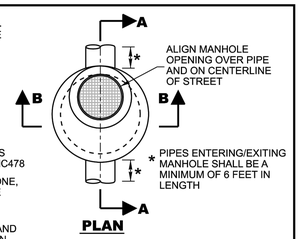

PLAN

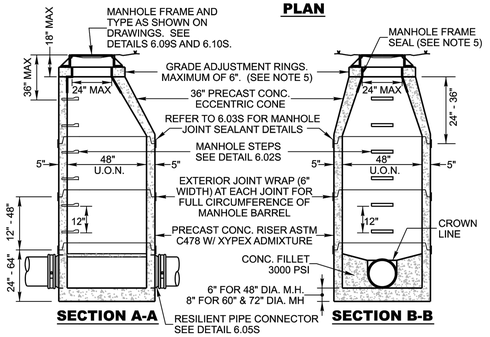

REV.: 01/2015	
REV.: 02/2012	
DATE: 08/2010	NOT TO SCALE

TYPICAL SANITARY SEWER MANHOLE

STANDARD DETAILS
LIMESTONE COUNTY WATER AND SEWER AUTHORITY
LIMESTONE COUNTY, ALABAMA

6.01 S

NOTE:
3/8" STEEL REINFORCED ROD ENCAPSULATED IN POLYPROPYLENE PLASTIC

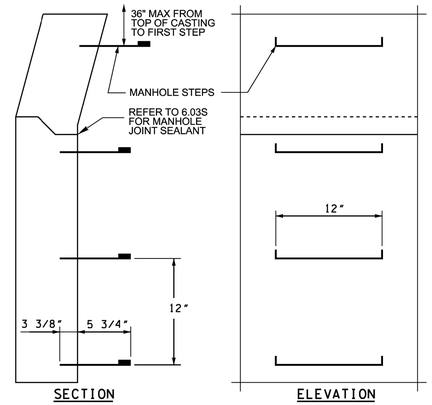

1. STEPS TO BE INTEGRALLY CAST INTO MANHOLE SECTION.
2. STEPS TO BE ALIGNED VERTICALLY THROUGHOUT EACH MANHOLE SECTION
3. STEPS TO BE ALIGNED WITH OUTLET PIPE DIRECTION
4. LAST STEP TO BE 12" ABOVE PIPE

REV. 01/2015	
DATE: 08/2010	NOT TO SCALE

MANHOLE STEPS DETAIL

STANDARD DETAILS
LIMESTONE COUNTY WATER AND SEWER AUTHORITY
LIMESTONE COUNTY, ALABAMA

6.02 S

NOTE:

WHERE MASTIC DOES NOT PROTRUDE, EITHER INSIDE OR OUTSIDE, POINT UP JOINT WITH GROUT

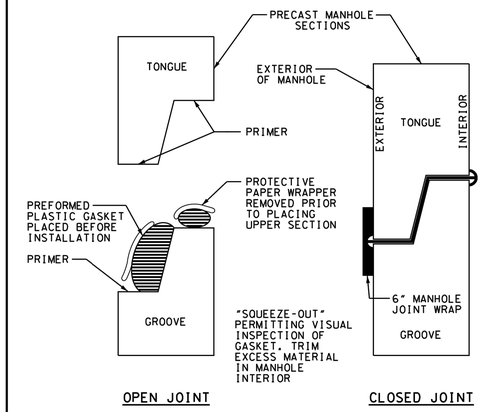

DATE: 08/2010	NOT TO SCALE

MANHOLE JOINT SEALANT DETAIL

STANDARD DETAILS
LIMESTONE COUNTY WATER AND SEWER AUTHORITY
LIMESTONE COUNTY, ALABAMA

6.03 S

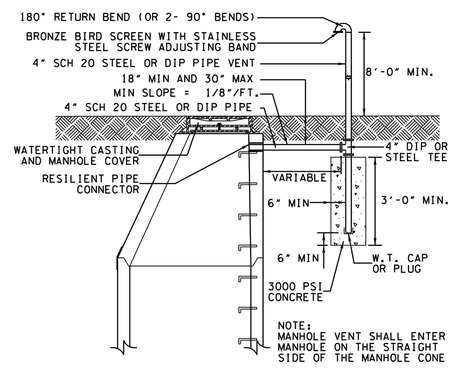

NOTES:

1. PIPE TO BE PAINTED WITH ONE COAT OF PRIMER, AND TWO COATS OF SAFETY GREEN ENAMEL.
2. TOP OF VENT TO BE MINIMUM OF 8'-0" ABOVE GRADE OR HIGHER IF ELEVATION IS SHOWN ON PLANS.

DATE: 08/2010	NOT TO SCALE

MANHOLE VENT DETAIL

STANDARD DETAILS
LIMESTONE COUNTY WATER AND SEWER AUTHORITY
LIMESTONE COUNTY, ALABAMA

6.04 S

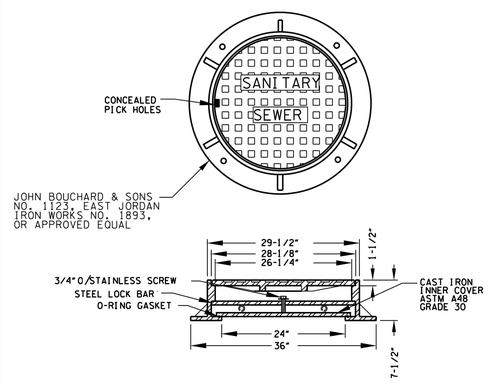

DATE: 08/2010	NOT TO SCALE

WATERTIGHT MANHOLE FRAME AND COVER

STANDARD DETAILS
LIMESTONE COUNTY WATER AND SEWER AUTHORITY
LIMESTONE COUNTY, ALABAMA

6.10 S

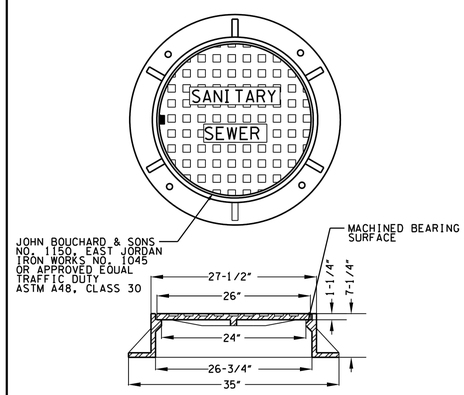

DATE: 08/2010	NOT TO SCALE

TRAFFIC TYPE MANHOLE FRAME AND COVER

STANDARD DETAILS
LIMESTONE COUNTY WATER AND SEWER AUTHORITY
LIMESTONE COUNTY, ALABAMA

6.09 S

PUGH WRIGHT MCNALLY INC.
CIVIL ENGINEERS
310 8th AVENUE NE -- PO BOX 2419 -- DECATUR, AL -- (256) 353-3937
Pugh Wright McNally, Inc. www.pughwrightmcnally.com

REVISIONS

Rev#	Description	Date
5		
4		
3		
2		
1		

DR HORTON
DAVIS PRESERVE - PHASE 2
LIMESTONE COUNTY
SECTION 11, TOWNSHIP 3 SOUTH, RANGE 3 WEST
LIMESTONE COUNTY, ALABAMA

CONSTRUCTION DETAILS

Date: 04/12/2024
Drawn By: GGL
Approved By: NLT
Scale: N.T.S.

Sign/Seal
ALABAMA LICENSED NO. 30456 PROFESSIONAL ENGINEER 04/12/2024 NATHAN L. TOMBERLIN

Job Number:
537-24

Sheet Number:
C8.4

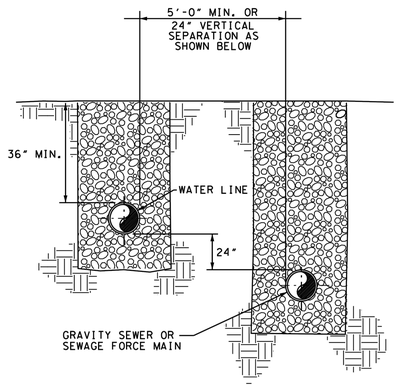

NOTE: IF SEPARATION CANNOT BE MAINTAINED, THE SEWER PIPE SHALL BE ENCASED A DISTANCE OF 5 FEET EITHER SIDE OF THE POINT OF CROSSING

DATE: 08/2010 | NOT TO SCALE

TYPICAL WATER AND SANITARY SEWER SEPARATION

STANDARD DETAILS

LIMESTONE COUNTY WATER AND SEWER AUTHORITY
LIMESTONE COUNTY, ALABAMA

6.13 S

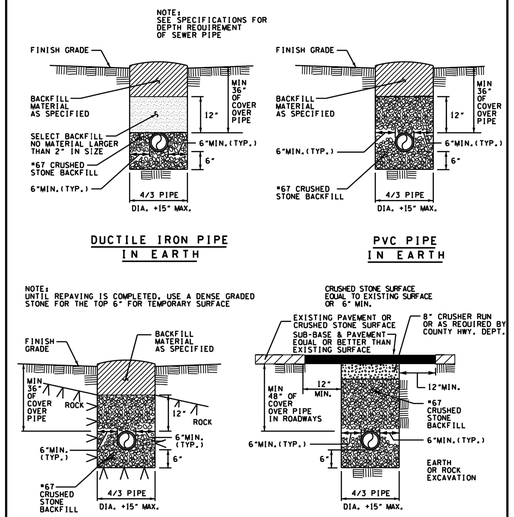

DATE: 08/2010 | REFER TO DETAIL 6.08W FOR SEWER FORCE MAIN BEDDING AND BACKFILLING DETAILS | NOT TO SCALE

GRAVITY SANITARY SEWER BEDDING AND BACKFILL DETAILS

STANDARD DETAILS

LIMESTONE COUNTY WATER AND SEWER AUTHORITY
LIMESTONE COUNTY, ALABAMA

6.14 S

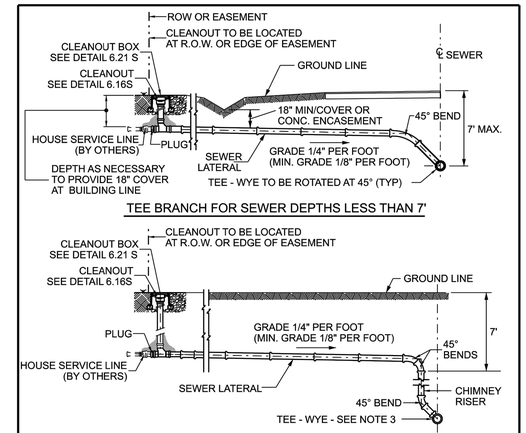

NOTES:

1. SERVICE MATERIAL TO BE SCH. 40 PVC. BACKFILL FOR SERVICE LINE TO BE SAME AS FOR SEWER LINE.
2. LATERAL SIZE TO BE 4" FOR RESIDENTIAL SERVICES; 6" FOR COMMERCIAL OR INDUSTRIAL SERVICES UNLESS OTHERWISE NOTED.
3. TEES SHALL BE SDR 26 WITH GASKETED BRANCHES. 8" x 4" SERVICES SHALL TRANSITION TO SCH. 40 PVC AT THE TEE. 8" x 6" TEE WILL REQUIRE A SECTION OF SDR 26 PIPE AND SLEEVE TO TRANSITION TO SCH. 40 PVC.
4. ALL FITTINGS PAST THE TEE SHALL BE SOLVENT WELD GLUE JOINT FITTINGS.
5. TEES SHALL NOT BE ORIENTED IN THE 12 O'CLOCK (STRAIGHT UP) POSITION.
6. TEES SHALL NOT BE PLACED BACK-TO-BACK. CONSECUTIVE TEES MUST BE SEPARATED BY AT LEAST 6 FT OF MAIN LINE PIPE.

DATE: 08/2010 | REVISED 11/2010 | REVISED 02/2012 | NOT TO SCALE

SANITARY SEWER LATERALS

STANDARD DETAILS

LIMESTONE COUNTY WATER AND SEWER AUTHORITY
LIMESTONE COUNTY, ALABAMA

6. 15 S

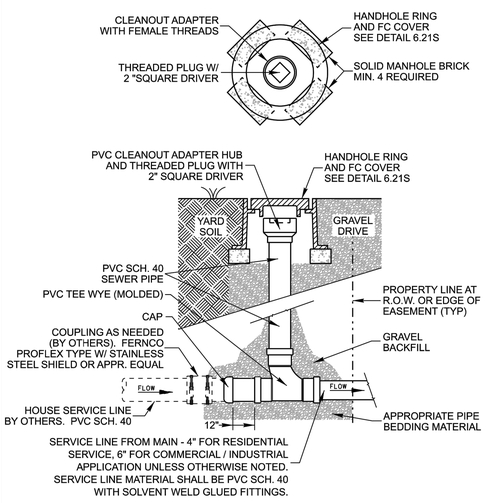

REVISED: 11/2010
DATE: 08/2010 | NOT TO SCALE

SANITARY SEWER SERVICE CLEANOUT ASSEMBLY

STANDARD DETAILS

LIMESTONE COUNTY WATER AND SEWER AUTHORITY
LIMESTONE COUNTY, ALABAMA

6. 16 S

PUGH WRIGHT MCNALLY INC.
CIVIL ENGINEERS
310 8th AVENUE NE -- PO BOX 2419 -- DECATUR, AL -- (256) 353-3937
Pugh Wright McNally, Inc. www.pughwrightmcnally.com

REVISIONS

Rev#	Description	Date
5		
4		
3		
2		
1		

DR HORTON
DAVIS PRESERVE - PHASE 1
LIMESTONE COUNTY
SECTION 11, TOWNSHIP 3 SOUTH, RANGE 3 WEST
LIMESTONE COUNTY, ALABAMA

CONSTRUCTION DETAILS

Date: 04/12/2024
Drawn By: GGL
Approved By: NLT
Scale: N.T.S.

Sign/Seal
ALABAMA LICENSED NO. 30456 PROFESSIONAL ENGINEER 04/12/2024 NATHAN L. TOMBERLIN

Job Number:
537-24

Sheet Number:
C8.5